Your Sansui 7000 receiver is designed for trouble-free performance with a minimum of care. Should the receiver work unsatisfactorily, please refer to the section of this manual entitled 'General Trouble-shooting Chart' on pages 3 and 4. If you will be confronted with a trouble not covered in the chart, please contact your nearest Sansui dealer or Authorized Service Station.

For the man who can repair or replace the defective part himself
This manual includes a schematic wiring diagram and pictures identifying all of the electric and electronic parts. The parts list (pp. 13~24) gives the reference numbers and letters which are used in the illustrations of printed-circuit boards to identify each part. To remove the front panel, bottom board and wood case from the unit, refer to 'Disassembly Procedure (p. 5)'.

For the man who can align the tuner himself
The necessary steps for FM and AM alignments are given in the charts under the heading 'Alignment (pp. 9~12)'. Note that the alignment should be used only when really necessary and that the proper alignment requires use of precision instruments listed on the top of the chart. Never attempt to align unless such instruments are available.

For the man who wants to make a custom cabinet himself
Before mounting the 7000 in a custom cabinet or making such a cabinet, be sure to refer to the section entitled 'Custom Mounting (pp. 7~8)'.

If you have any questions regarding operation and service, please consult your nearest Sansui dealer or Authorized Service Station.

CONTENTS

GENERAL TROUBLESHOOTING CHART 3, 4
DISASSEMBLY PROCEDURE 5
BLOCK DIAGRAM 6
CUSTOM MOUNTING..... 7, 8
ALIGNMENT..... 9, 10, 11, 12
PRINTED CIRCUIT BOARDS AND
PARTS LIST..... 13, 14, 15, 16, 17, 18, 19, 20, 21, 22, 23
OTHER PARTS AND THEIR POSITION
ON CHASSIS 24, 25, 26

30

SERVICE MANUAL

SOLID-STATE AM/FM STEREO TUNER AMPLIFIER

SANSUI 7000

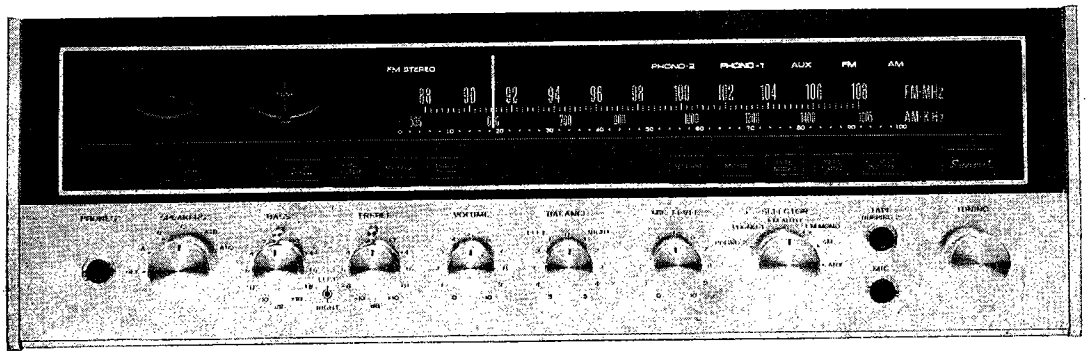

Sansui

SANSUI ELECTRIC COMPANY LIMITED

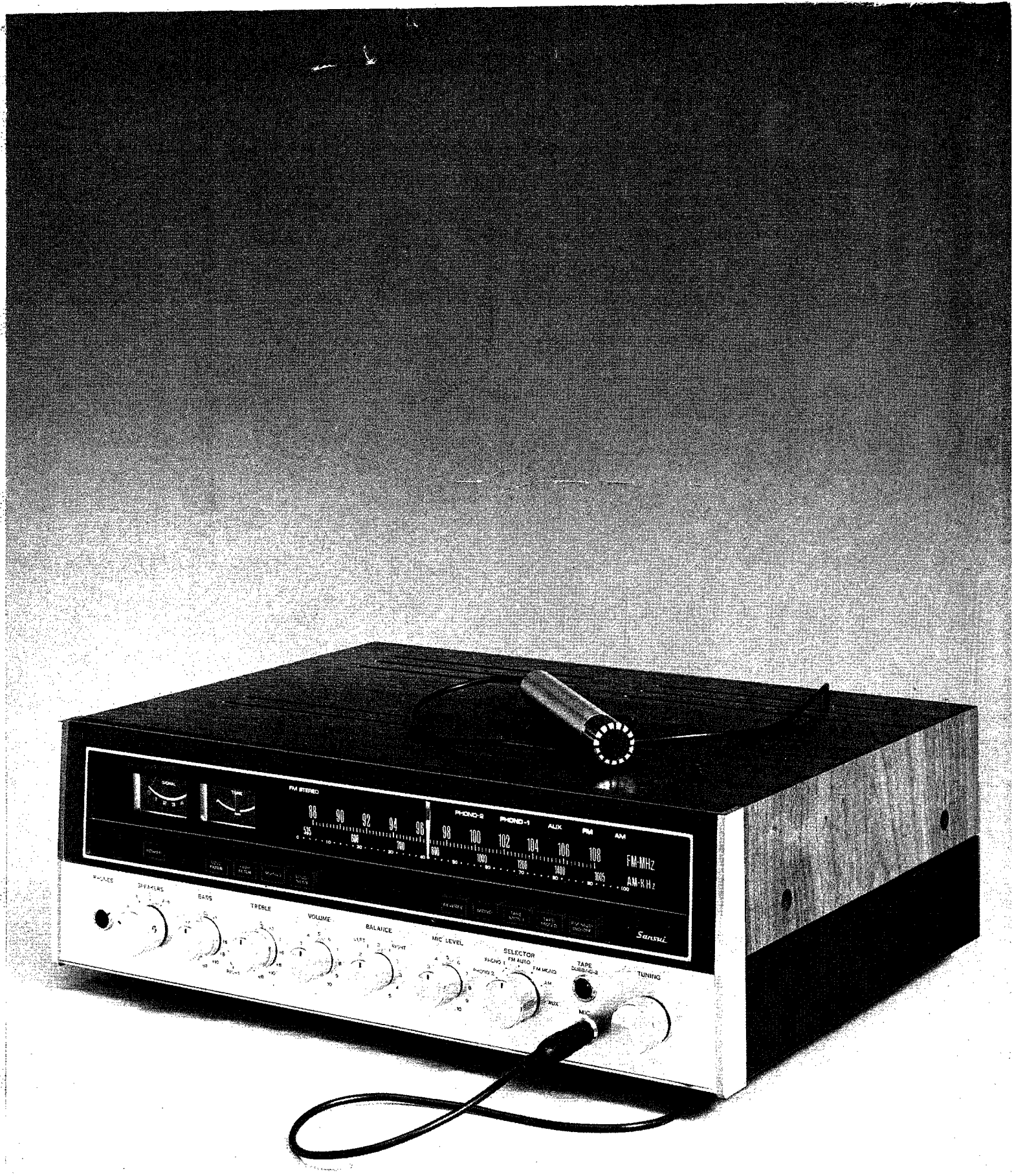
FM STEREO
88 90 92 94 96
PHONO-2 PHONO-1 AUX FM AM
98 100 102 104 106 108
FM-MHz
AM-KHz
PHONES
SPEAKERS
BASS
TREBLE
VOLUME
BALANCE
MIC LEVEL
SELECTOR
TAPE
TUNING
Sansui

GENERAL TROUBLESHOOTING CHART

If the amplifier is otherwise operating satisfactorily, the more common causes of trouble may generally be attributed to the following:

1. Incorrect connection or loose terminal contacts. Check the speakers, record player, tape deck, antenna and line cord.

2. Improper operation. Before operating any audio component, be sure to read the manufacturer's instructions.

3. Improper location of audio components. The proper positioning of components, such as speakers and turntable, is vital to stereo.

4. Defective audio components.

The following are some other common causes of malfunction and what to do about them.

PROGRAM	SYMPTOM	PROBABLE CAUSE	WHAT TO DO
AM, FM or MPX reception	A. Constant or intermittent noise heard at times or in a certain area	* Discharge or oscillation caused by electrical appliances, such as fluorescent lamp, TV set, D.C. motor, rectifier or oscillator * Natural phenomena, such as atmospheric, static or thunderbolts * Insufficient antenna input due to ferroconcrete wall or long distance from the station * Wave interference from other electrical appliances	* Attach a noise limiter to the electrical appliance causing the noise, or attach it to the amplifiers power source * Install an outdoor antenna and ground the amplifier to raise the signal-to-noise ratio * Reverse the power cord plug-receptacle connections * If the noise occurs at a certain frequency, attach a wave trap to the ANT. input * Keep the set at a proper distance from other electrical appliances
	B. The needle of the signal and tune meter does not move sharply	* Receiver is located in a weak signal area	* Install the antenna for maximum signal pickup
	C. The zero point of the meter diverges much	* Regional difference in field intensity	* The unit is not at fault
AM reception	A. Noise heard at a particular time of a day, in a certain area or over part of dial	* Due to the nature of AM broadcasts	* Install the antenna for maximum antenna efficiency. See "ANTENNA" in the operating instructions * In some cases, the noise can be eliminated by grounding the amplifier or reversing the power cord plug-receptacle connections
	B. High-frequency noise	* Adjacent-channel interference or beat interference * TV set too close to audio system	* Although such noise cannot be eliminated by the amplifier, it is advisable to adjust the TREBLE control from midpoint to left and switch on the HIGH FILTER * Keep the TV set at a proper distance from the audio system
FM reception	A. Noisy	* Poor noise limiter effect or too low SN ratio due to insufficient antenna input	* Install the antenna (supplied) for maximum signal strength * If this does not prove effective, use an outdoor antenna designed exclusively for FM. When you use a TV antenna for both TV and FM with a splitter, make sure TV reception is not affected * An excessively long antenna may cause noise
	Note: FM reception is affected considerably by transmission conditions of stations: power and antenna efficiency. As a result, you may receive one station quite well while receiving another station poorly		

PROGRAM	SYMPTOM	PROBABLE CAUSE	WHAT TO DO
FM reception (cont'd)	B. A series of pops	* Ignition noise caused by starting of an automobile engine	* Install the antenna and its lead-in wire in proper distance from the road or raise the antenna input as described above
	C. Tuning noise between stations	* This results from the nature of the FM reception. * The FM MUTING OFF switch depressed	* Set the FM MUTING OFF switch to its up or on position
FM-MPX reception	A. Noise heard during FM-MPX reception while not heard during FM mono reception	* Weaker signal because the service area of the FM-MPX broadcast is only half that of the FM mono broadcast	* Install the antenna for maximum antenna input * Switch on the HIGH FILTER and/or turn the TREBLE control from midpoint, left
	B. Clearness of channel separation is decreased during reception	* Excess heat	* Circulation of air is important to the amplifier. Be sure that air is flowing under the amplifier
	C. The stereo indicator blinks on and off	* Interference	* The indicator is not at fault, adjust VR_{403}
	D. The stereo indicator blinks on and off even though stereo station is not received	* Interference	* The indicator is not at fault, adjust VR_{403}
Record playing or tape playback	A. Hum or howling	* Record player placed directly on speaker * Wire other than shielded wire used * Loose terminal contact * Shielded wire too close to line cord, fluorescent lamp or other electrical appliances * Nearby amateur radio station or TV transmission antenna	* Place a cushion between the player and the speaker box or place them away from each other * The connecting shielded wire should be as short as possible * Switch on the LOW FILTER and adjust the BASS control from midpoint, left * Consult the nearest Radio Regulatory Bureau
	B. Surface noise	* Worn or old record * Worn needle * Needle dusty * Improper needle pressure	* Recondition the playback head of the tape deck or the needle of the record player * Adjust the TREBLE control from midpoint, left * Switch the HIGH FILTER on
All stereo programs	BALANCE control is not at midpoint when equal sound comes from left and right channels	* It is important to adjust for equal sound from both channels. It should not always be set to the midpoint	* Depress the MONO switch and then set the BALANCE control to a position where equal sound comes from both channels * Check if the efficiency of one speaker is balanced with that of the other

DISASSEMBLY PROCEDURE

REMOVING THE FRONT PANEL, WOOD CASE AND BOTTOM BOARD

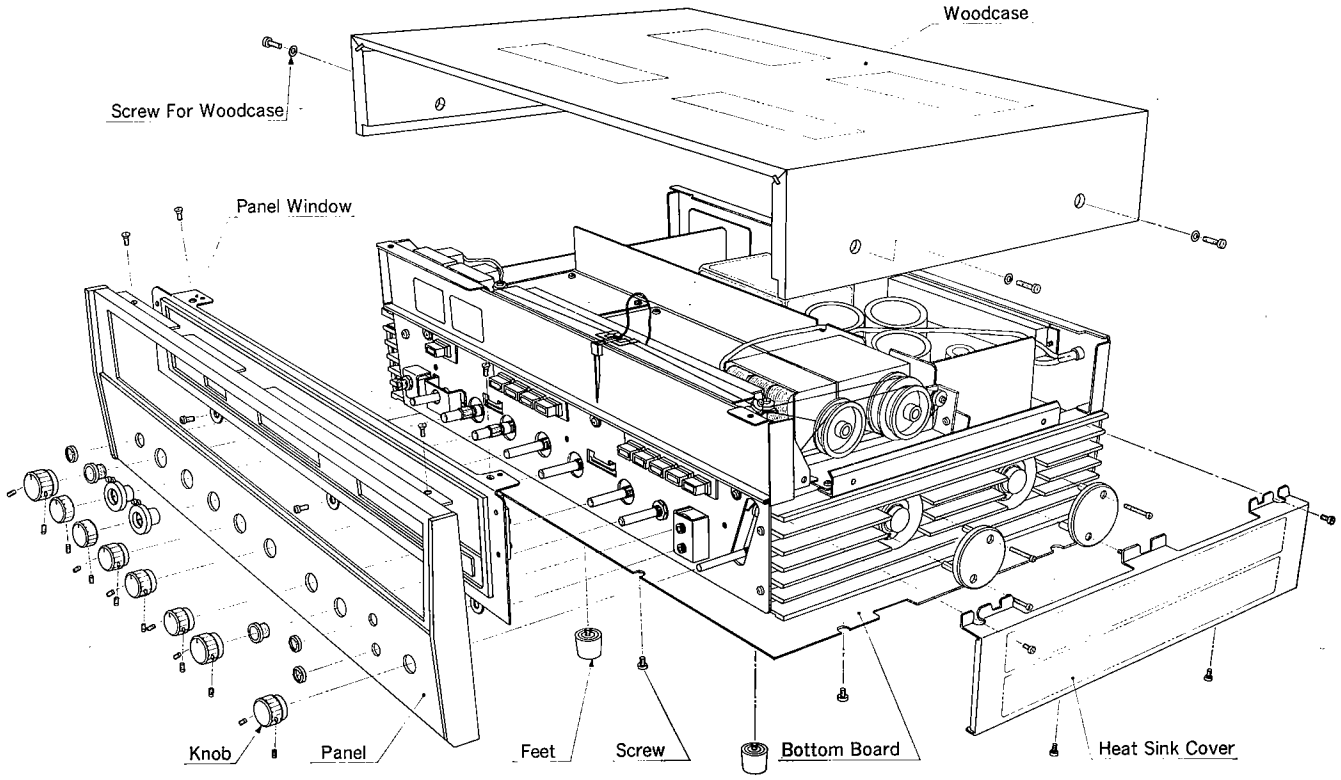

DIAL MECHANISM

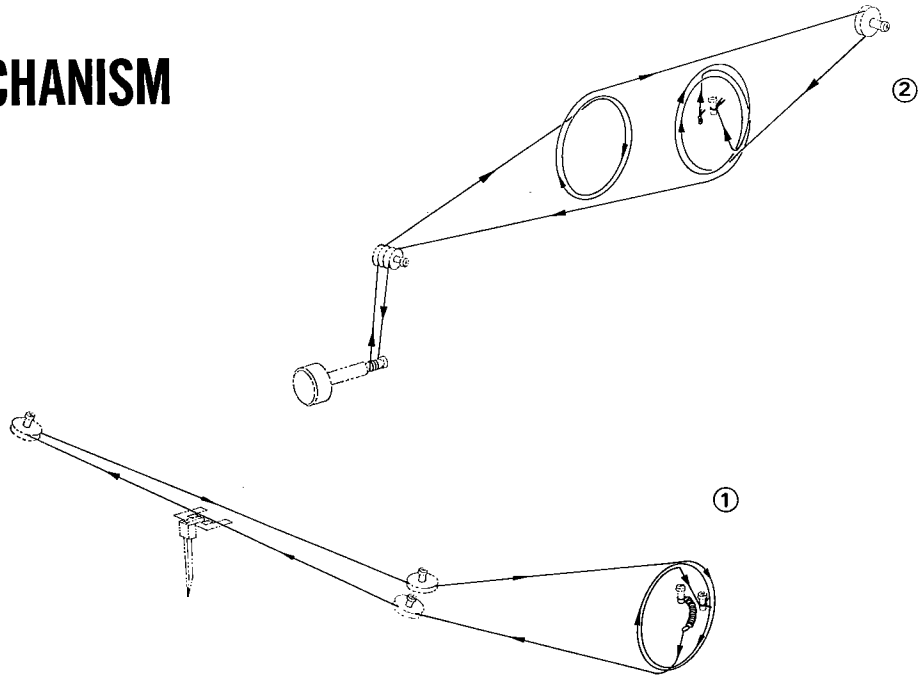

BLOCK DIAGRAM

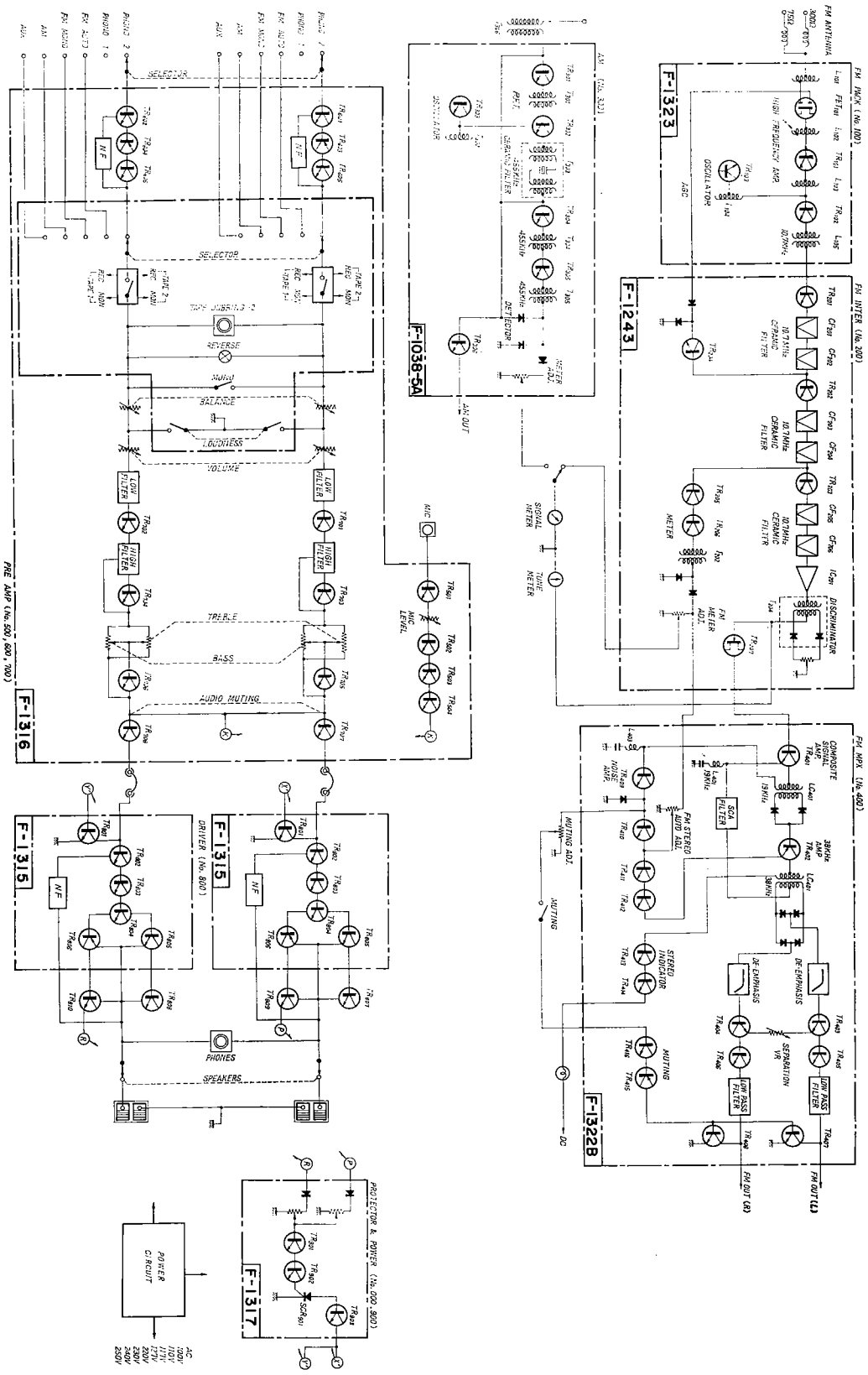

CUSTOM MOUNTING

Custom Mounting

1. Make a panel cutout 434mm ($17^{3}/_{32}$″) wide and 134mm ($5^{9}/_{32}$″) high.
2. Obtain two pieces of wood 20mm ($^{25}/_{32}$″) square and 230mm ($9^{1}/_{16}$″) long, and place them on the bottom board of the custom cabinet.
3. Drill two holes through the two pieces of wood and the bottom board of the cabinet as illustrated.
4. Remove the wood case, feet and two screws (on the control panel side of the bottom board of the amplifier).
5. Remove the heat sink covers from both sides of the unit.
6. Slide the amplifier into the cabinet through the panel cutout until the back of the control panel is tight against the panel of the cabinet.
7. Insert the two butterfly bolts (supplied) with washers through the holes in the bottom board of the cabinet and fasten the chassis into place.

Note: When the receiver is mounted in the cabinet, the wood case, feet and two screws are not used. Retain them for future use.

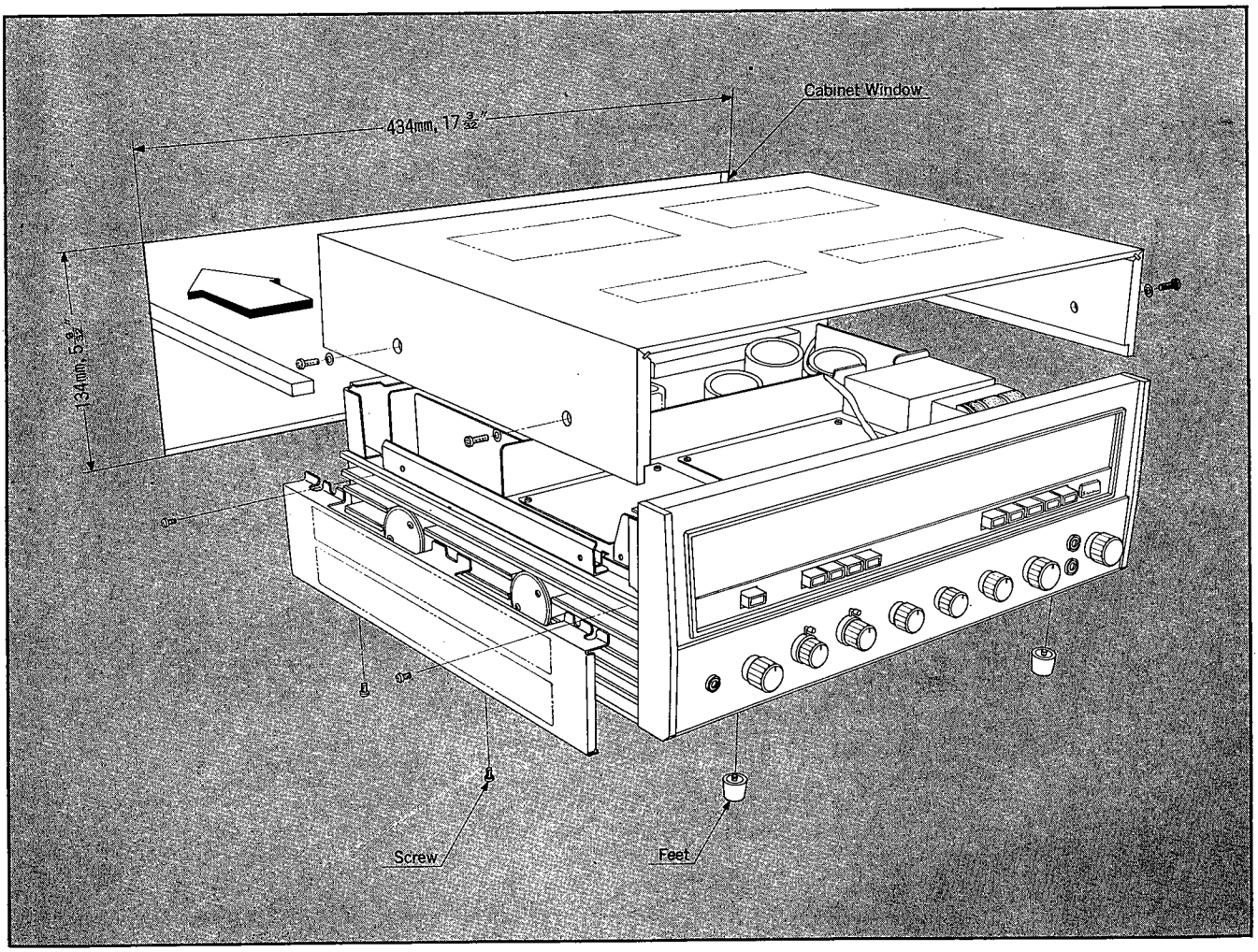

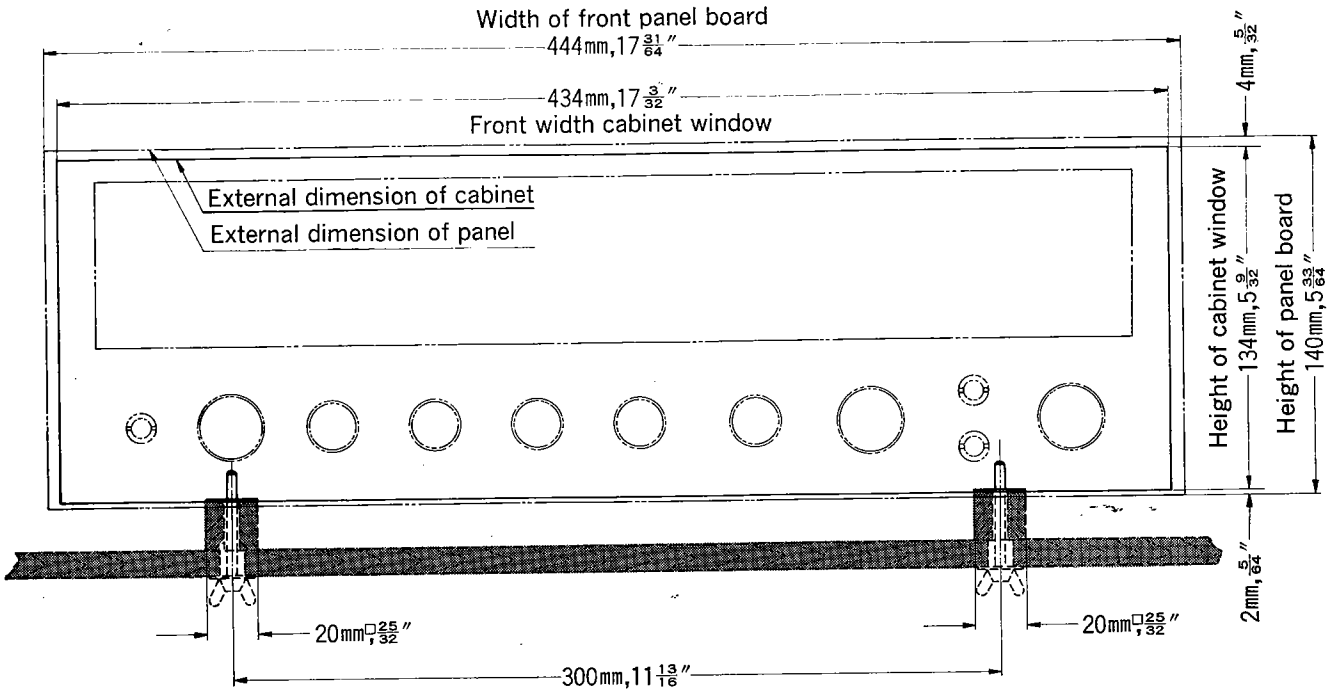
Width of front panel board
444mm,17 31/64″
434mm,17 3/32″
Front width cabinet window
External dimension of cabinet
External dimension of panel
4mm, 5/32″
Height of cabinet window
134mm,5 9/32″
Height of panel board
140mm,5 33/64″
2mm, 5/64″
20mm□ 25/32″
20mm□ 25/32″
300mm,11 13/16″

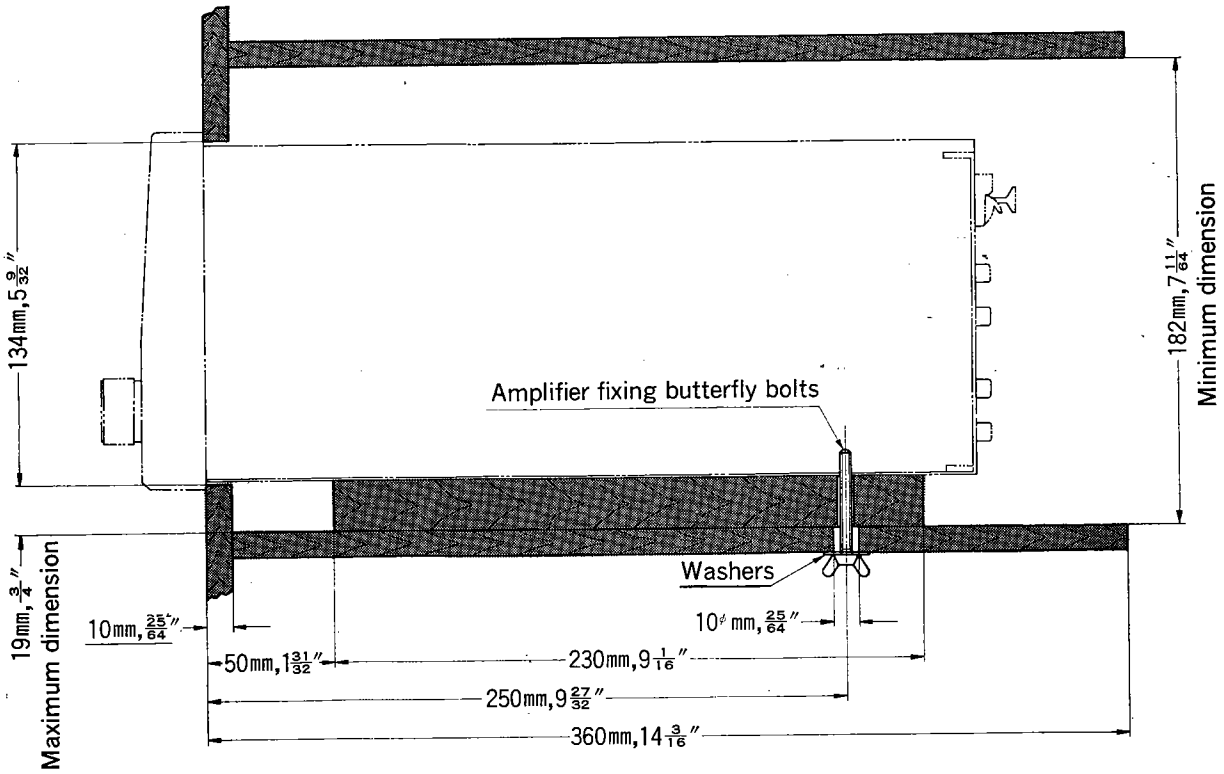
134mm,5 9/32″
182mm,7 11/64″
Minimum dimension
Amplifier fixing butterfly bolts
Washers
19mm, 3/4″
Maximum dimension
10mm, 25/64″
10φ mm, 25/64″
50mm,1 31/32″
230mm,9 1/16″
250mm,9 27/32″
360mm,14 3/16″

ALIGNMENT

TEST POINTS

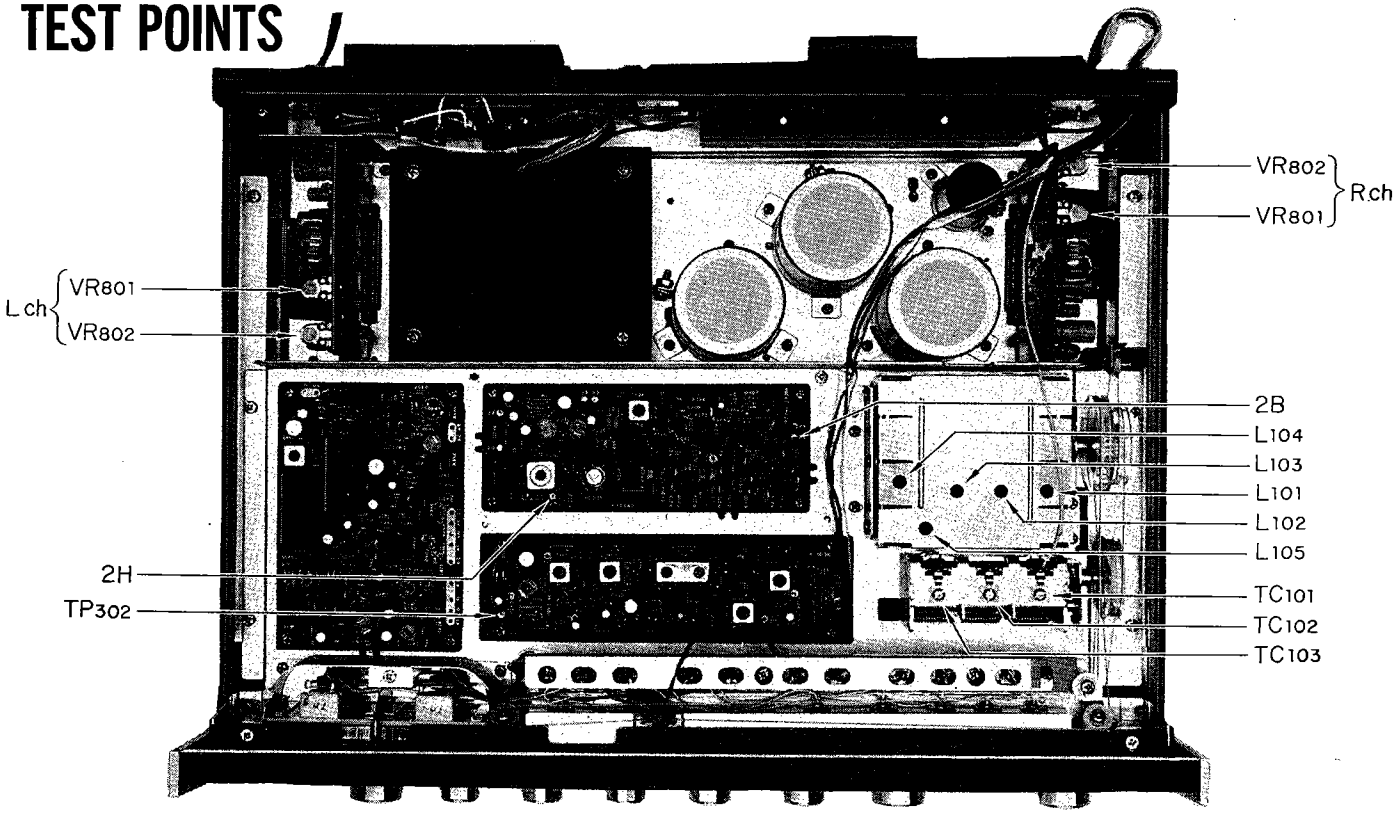

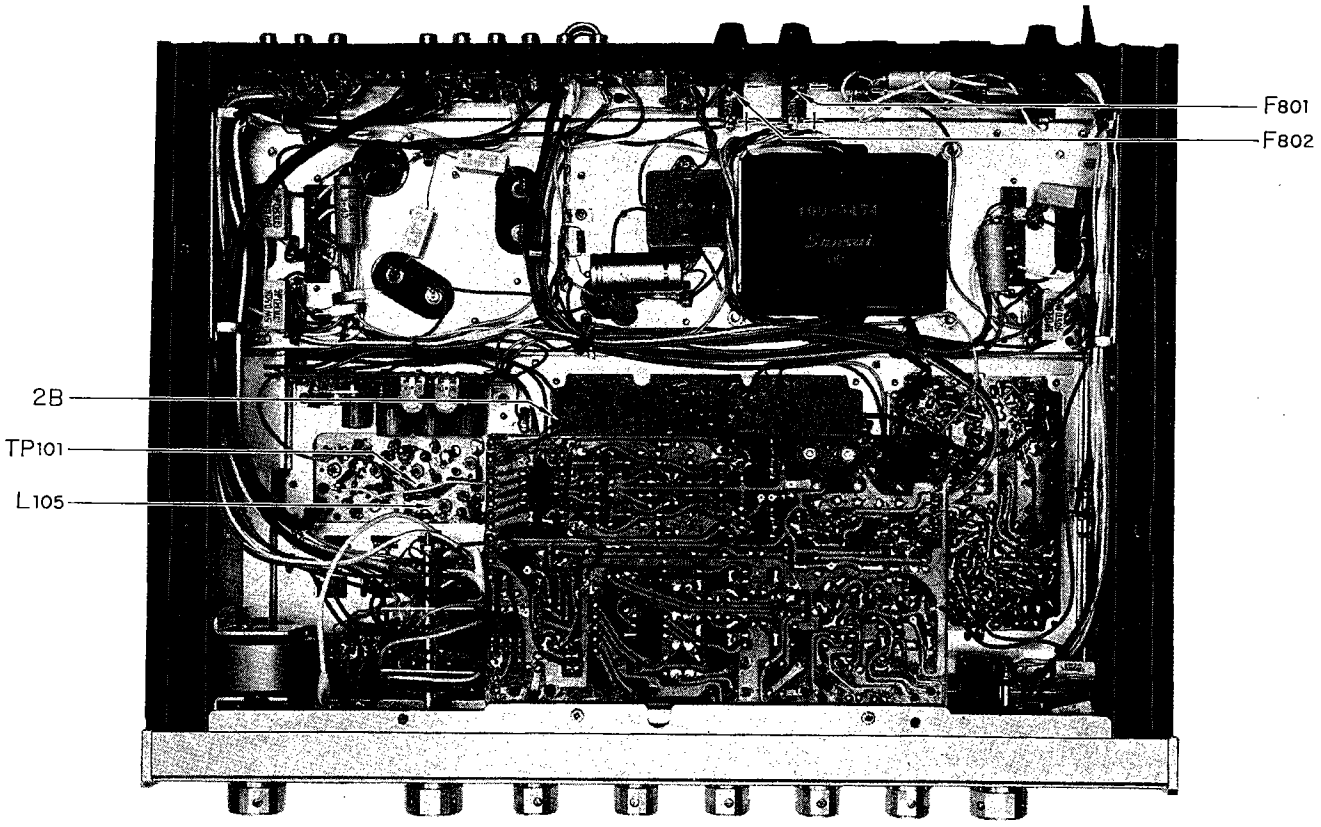

FM ALIGNMENT PROCEDURE

NOTE: To align, set the FM signal generator level to minimum.

Any internal parts replacement or changes you make in the 7000 requires proper adjustment again. Appropriate test points and adjustments are given on pages 9~12.

Equipment required: 1. Sweep Generator 2. Oscilloscope 3. FM Signal Generator 4. Multiplex Stereo Generator 5. AC V.T.V.M. 6. Audio Oscillator 7. AM Signal Generator 8. Distortion Meter

STEP	ALIGN	GENERATOR	FEED SIGNAL	OUTPUT INDICATOR	DIAL SETTING	ADJUST	ADJUST FOR
1.	IF Transformer	10.7MHz ±200 kHz Sweep generator	To TP_{101} via the 10pF ceramic capacitor	Oscilloscope is connected to 2B via the 10pF ceramic by using a detector probe		L_{105}	Best I.F. wave form
2.	Discriminator	10.7MHz ±200 kHz Sweep generator	To TP_{101} via the 10pF ceramic capacitor	Oscilloscope is connected to 2H (TP_{201}).		FM Discriminating transformer T_{201} primary and secondary	S curve
3.	O.S.C.	FM signal generator 88MHz 400Hz 100% Modulation	To antenna terminals	Oscilloscope and V.T.V.M. at output load	88 MHz	O.S.C. coil L_{104}	Maximum
4.	O.S.C.	FM signal generator 108MHz 400Hz 100% Modulation	To antenna terminals	Oscilloscope and V.T.V.M. at output load	108 MHz	O.S.C. trimmer TC_{104}	Maximum
5.	Repeat 3 and 4						
6.	RF Amp. Circuit	FM signal generator 90MHz 400Hz 100% Modulation	To antenna terminals	Oscilloscope and V.T.V.M. at output load	90 MHz	Antenna coil L_{101}, L_{102} and L_{103}	Maximum
7.	RF Amp. Circuit	FM signal generator 106MHz 400Hz 100% Modulation	To antenna terminals	Oscilloscope and V.T.V.M. at output load	106 MHz	Trimmer TC_{101}, TC_{102} and TC_{103}	Maximum
8.	Repeat 6 and 7						

FM IF WAVE FORM

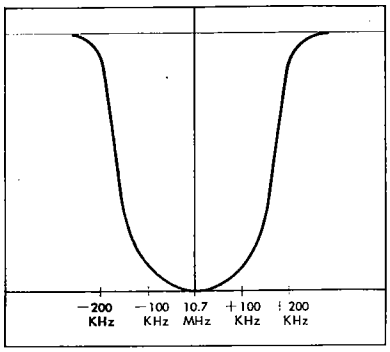

FM DISCRIMINATOR WAVE FORM

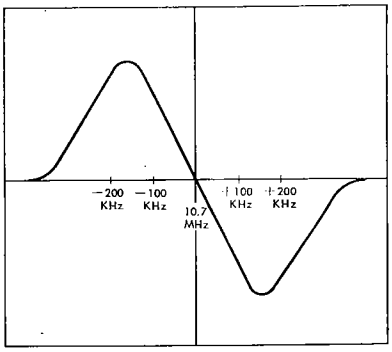

ALIGNMENT

FM MULTIPLEX CIRCUIT

STEP	ALIGN	GENERATOR	FEED SIGNAL	OUTPUT INDICATOR	DIAL SETTING	ADJUST	ADJUST FOR
1.	19kHz phase	FM signal generator—98MHz Stereo signal generator —composite signal with pilot signal, left chan, 30% modulation.	To antenna terminal	Connect distortion meter to right chan. load terminal	98MHz	L_{401}	Min. distortion in right chan.
2.	Stereo separation	Same as above	Same as above	Connect oscilloscope and V.T.V.M. to load terminal	Same as above	VR_{401}	Max. separation

AM ALIGNMENT PROCEDURE

NOTE: To align, set the AM signal generator level to minimum.

STEP	ALIGN	GENERATOR	FEED SIGNAL	OUTPUT INDICATOR	DIAL SETTING	ADJUST	ADJUST FOR
1.	IF. Transformer	455 kHz ±30 kHz Sweep-generator	Antenna terminals	Oscilloscope and V.T.V.M. at TP_{302}		I.F.T. T_{303}~T_{305}	Best IF wave form
2.	O.S.C.	AM-generator 535 kHz 400 Hz 30% Modulation	Antenna terminals	Oscilloscope and V.T.V.M. at output load	535 kHz	O.S.C. Coil T_{302}	Maximum
3.	O.S.C.	AM-generator 1600 kHz 400 Hz 30% Modulation	Antenna terminals	Oscilloscope and V.T.V.M. at output load	1600 kHz	O.S.C. Trimmer cap. TC_{303}	Maximum
4.	Repeat 2 and 3						
5.	RF amp.	AM-generator 600 kHz 400 Hz 30% Modulation	Antenna terminals	Oscilloscope and V.T.V.M. at output load	600 kHz	RF transformer T_{301}	Maximum
6.	Antenna circuit	AM-generator 600 kHz 400 Hz 30% Modulation	Antenna terminals	Oscilloscope and V.T.V.M. at output load	600 kHz	Ferrite bar Antenna coil T_{306}	Maximum
7.	RF amp.	AM-generator 1400 kHz 400 Hz 30% Modulation	Antenna terminals	Oscilloscope and V.T.V.M. at output load	1400 kHz	RF Trimmer TC_{302}	Maximum
8.	Antenna circuit	AM-generator 1400 kHz 400 Hz 30% Modulation	Antenna terminals	Oscilloscope and V.T.V.M. at output load	1400 kHz	Antenna circuit Trimmer TC_{301}	Maximum
9.	Repeat 5, 6, 7, 8						

AM IF CHARACTERISTIC

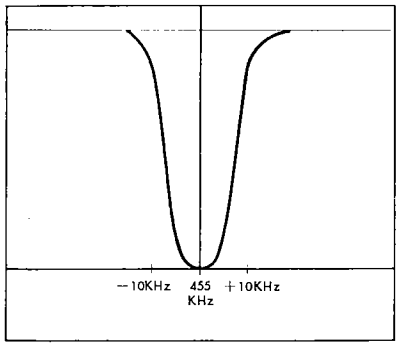

1. CURRENT ADJUSTMENT

STEP	SETTING OF AMMETER (TESTER)	WHAT TO DO	NOTE
1.		Remove F_{801} and F_{802}.	Use an ammeter having 100mA range.
2.		Set VR_{802} (left and right channel) to minimum.	
3.		Set VR_{703} and VR_{704} (VOLUME) to minimum.	
4.		Push the POWER switch ON.	Be sure to switch on 1st and then connect the ammeter.
5.	100 mA range.	Connect the ammeter to F_{801} (See TEST POINTS).	
6.		Turn VR_{802} (left channel) clockwise and adjust current to 27 to 33mA.	
7.	100 mA range.	Push the POWER switch OFF and attach F_{801} in place.	
8.		Push the POWER switch ON and connect the ammeter to F_{802} (See TEST POINTS).	
9.		Turn VR_{802} (right channel) clockwise and adjust current to 27 to 33mA.	
10.		Attach F_{802} in place.	

2. OUTPUT ADJUSTMENT

STEP	WHAT TO DO	NOTE
1.	Adjust the volume control to minimum.	
2.	Set an oscillator to 1,000Hz and connect it to the LEFT AUX input.	The oscillator used should have the oscillation frequency of 20 to 20,000Hz and the output voltage of more than 200mV.
3.	Set the SELECTOR switch to AUX	Set other controls and switches as follows: BALANCE to CENTER TAPE MON to OFF MODE to STEREO TONE to CENTER Others to OFF
4.	Connect an 8- or 16-ohm load resistor having capacity of more than 80 watts to the LEFT SPEAKER output.	
5.	Connect an oscilloscope to the SPEAKER terminal.	
6.	Push the POWER switch on and advance the volume little by little. Check the output at the terminal by means of the oscilloscope.	
7.	Adjust VR_{801} (left channel) so that the fronts of sine wave are clipped simultaneously,	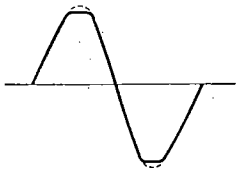
8.	Adjust the right channel as above.	

PRINTED CIRCUIT BOARDS AND PARTS LIST

W: Parts No. **X:** Parts Name **Y:** Stock No. **Z:** Position of Parts

FM IF BLOCK 〈F-1243〉

W	X	Y	Z
R201	220Ω ±10% ¼W CR.	0100221	2 C
R202	15kΩ ±10% ¼W CR.	0100153	2 C
R203	4.7kΩ ±10% ¼W CR.	0100472	2 C
R204	1kΩ ±10% ¼W CR.	0100102	2 C
R205	390Ω ±10% ¼W CR.	0101391	2 C
R206	680Ω ±10% ¼W CR.	0101681	2 C
R207	3.3kΩ ±10% ¼W CR.	0100332	2 C
R208	1.5kΩ ±10% ¼W CR.	0100152	2 C
R209	220Ω ±10% ¼W CR.	0100221	2 C
R210	1kΩ ±10% ¼W CR.	0100102	2 C
R211	390Ω ±10% ¼W CR.	0100391	2 C
R212	680Ω ±10% ¼W CR.	0101681	2 C
R213	3.3kΩ ±10% ¼W CR.	0100332	2 B
R214	1.5kΩ ±10% ¼W CR.	0100152	2 B
R215	220Ω ±10% ¼W CR.	0100221	2 B
R216	1kΩ ±10% ¼W CR.	0100102	2 B
R217	390Ω ±10% ¼W CR.	0100391	2 B
R218	680Ω ±10% ¼W CR.	0101681	2 B
R219	270Ω ±10% ¼W CR.	0101271	2 B
R220	56Ω ±10% ¼W CR.	0100560	2 B
R221	390Ω ±10% ¼W CR.	0101391	2 A
R222	1kΩ ±10% ¼W CR.	0101102	2 A
R223	1kΩ ±10% ¼W CR.	0101102	2 A
R224	270kΩ ±10% ¼W CR.	0100274	1 C
R225	100Ω ±10% ¼W CR.	0101101	1, 2 C
R226	1.8kΩ ±10% ¼W CR.	0101182	1 C
R227	330Ω ±10% ¼W CR.	0100331	1 C
R228	10kΩ ±10% ¼W CR.	0101103	1 C
R229	1.5kΩ ±10% ¼W CR.	0100152	1 C
R230	680Ω ±10% ¼W CR.	0101681	1, 2 C
R231	680Ω ±10% ¼W CR.	0101681	1, 2 B
R232	22kΩ ±10% ¼W CR.	0100223	1 B
R233	68Ω ±10% ¼W CR.	0100680	1 B
R234	2.2kΩ ±10% ¼W CR.	0100222	1 B
R235	1.2kΩ ±10% ¼W CR.	0100122	1 B
R236	560Ω ±10% ¼W CR.	0100561	1 B
R237	100Ω ±10% ¼W CR.	0101101	1, 2 B
R238	4.7kΩ ±10% ¼W CR.	0101472	1 B
R239	1kΩ ±10% ¼W CR.	0101102	1, 2 A
R240	100Ω ±10% ¼W CR.	0101101	2 A
R241	1kΩ ±10% ¼W CR.	0101102	1, 2 A
R242	1MΩ ±10% ¼W CR.	0101105	1 A
R243	1MΩ ±10% ¼W CR.	0101105	1 A
R244	4.7kΩ ±10% ¼W CR.	0101472	1 A
R245	10kΩ ±10% ¼W CR.	0101103	2 A
R246	18kΩ ±10% ¼W CR.	0101183	2 A
VR201	22kΩ (B)	1035150	1 A
VR202	47kΩ (B)	1035170	1 A
C201	0.022μF +80% −20% 25 V CC.	0656223	2 C
C202	0.022μF +80% −20% 25 V CC.	0656223	2 C
C203	0.022μF +80% −20% 25 V CC.	0656223	1 C
C204	0.022μF +80% −20% 25 V CC.	0656223	2 C
C205	0.022μF +80% −20% 25 V CC.	0656223	2 C
C206	0.022μF +80% −20% 25 V CC.	0656223	2 B
C207	0.022μF +80% −20% 25 V CC.	0656223	2 B
C209	0.022μF +80% −20% 25 V CC.	0656223	2 B
C210	0.022μF +80% −20% 25 V CC.	0656223	2 B
C211	0.022μF +80% −20% 25 V CC.	0656223	2 B
C212	0.039μF +80% −20% 25 V CC.	0656393	2 A
C213	220pF ±10% 50 V CC.	0660221	2 A
C214	220pF ±10% 50 V CC.	0660221	2 A
C215	10μF 25 V EC.	0513100	1 A
C216	0.022μF +80% −20% 25 V CC.	0656223	1 C
C217	47pF ±10% 50 V CC.	0660470	1 C
C218	0.022μF +80% −20% 25 V CC.	0656223	1 C
C219	47pF ±10% 50 V CC.	0660470	1 C
C220	22pF ±10% 50 V CC.	0660220	2 C
C221	22pF ±10% 50 V CC.	0660220	1 B
C222	0.022μF +80% −20% 25 V CC.	0656223	1 B
C223	0.022μF +80% −20% 25 V CC.	0656223	1 B
C224	22pF ±10% 50 V CC.	0660220	1 B
C225	22pF ±10% 50 V CC.	0660220	1 B
C226	0.022μF +80% −20% 25 V CC.	0656223	1 B
C227	3.3μF 50 V EC.	0515339	1 B
C228	0.022μF +80% −28% 25 V CC.	0656223	1 A
C229	0.022μF +80% −28% 25 V CC.	0656223	1 A
C230	47μF 16 V EC.	0512470	1 A
C231	220pF ±10% 50 V CC.	0660221	2 A
C232	0.33μF ±10% 50 V MC.	0601338	2 A
C233	10μF 25 V EC.	0513100	1 A
C234	0.022μF +80% −20% 25 V CC.	0656233	1 A
TR201	2SC930 (D)	0305791	2 C
TR202	2SC930 (D)	0305791	2 C
TR203	2SC930 (D)	0305791	2 B
TR204	2SC930 (D)	0305791	1 C
TR205	2SC930 (D)	0305791	1 B
TR206	2SC930 (D)	0305791	1 B
TR207	2SK24 (E, F)	0370060, 1	1 A
D201	IN60	0310331	1 C
D202	IN60	0310331	1 C
D203	IN60	0310331	1 B
D204	IN60	0310331	1 B
IC201	LA1111	0360050	2 A, B
T201	Discriminating Transformer	4235650	2 A
T202	Meter Coil	4235660	1 B
L201	3.3μH Micro Inductor	4900100	1 C
L202	3.3μH Micro Inductor	4900100	2 C
L203	3.3μH Micro Inductor	4900100	2 C
CF201	Ceramic Filter 10.7MHz	0910100, 1	2 C
CF202	Ceramic Filter 10.7MHz	0910100, 1	2 C
CF203	Ceramic Filter 10.7MHz	0910100, 1	2 C
CF204	Ceramic Filter 10.7MHz	0910100, 1	2 B
CF205	Ceramic Filter 10.7MHz	0910100, 1	2 B
CF206	Ceramic Filter 10.7MHz	0910100, 1	2 B

Abbreviations

CR	: Carbon Resistor	**AEC**	: Aluminum Solid Electrolytic Capacitor
SR	: Solid Resistor	**SC**	: Styrol Capacitor
CeR	: Cement Resistor	**CC**	: Ceramic Capacitor
MC	: Mylar Capacitor	**MiC**	: Mica Capacitor
EC	: Electrolytic Capacitor	**MPC**	: Metallized Paper Capacitor

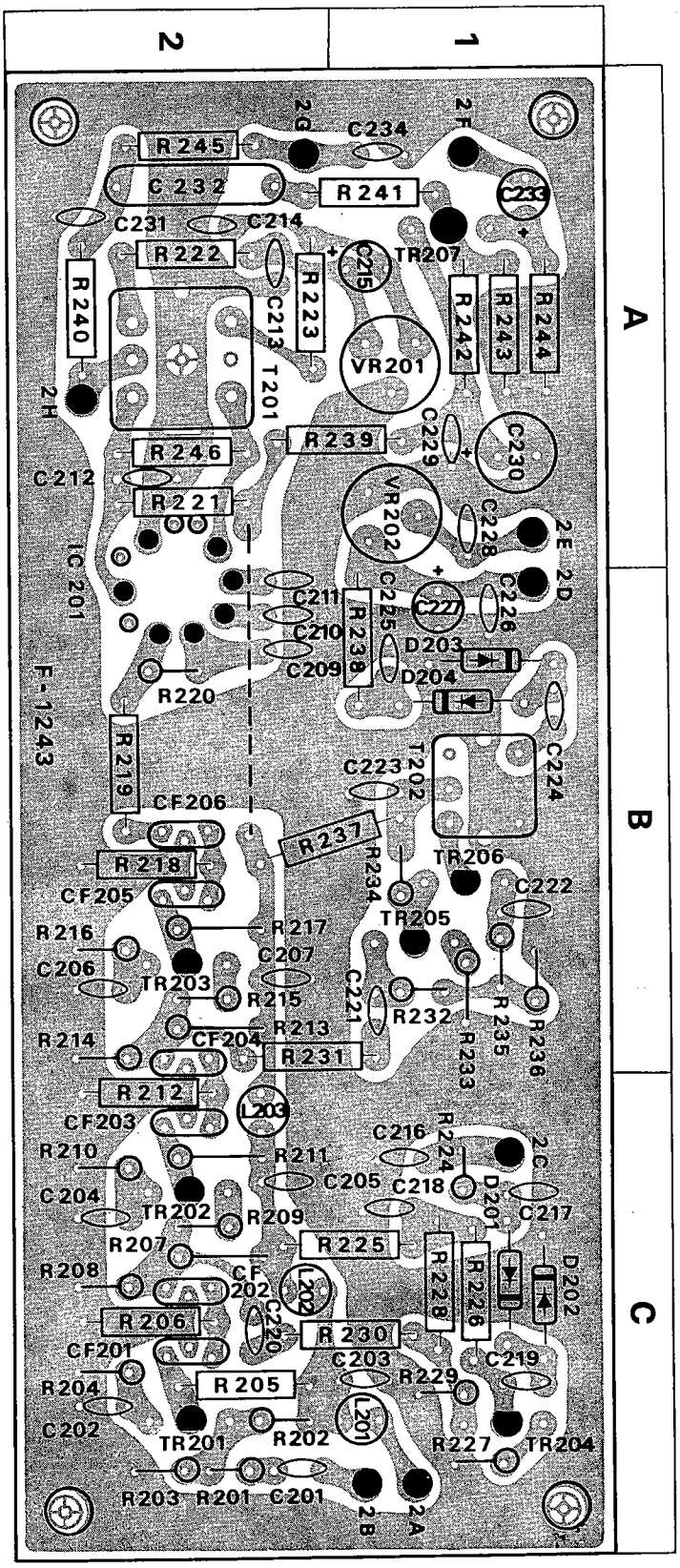

PRINTED CIRCUIT BOARDS AND PARTS LIST

W: Parts No. **X:** Parts Name **Y:** Stock No. **Z:** Position of Parts

FM MPX BLOCK 〈F-1322B〉

W	X	Y	Z
R401	1kΩ	0100102	1 C
R402	1kΩ	0100102	1 C
R403	100kΩ	0100104	1 C
R404	22kΩ	0100223	1 C
R405	100kΩ	0101104	2 A
R406	82kΩ	0100823	1 C
R407	6.8kΩ	0100682	2 C
R408	1.2kΩ	0100122	1 C
R409	47kΩ	0101473	2 C
R410	22kΩ	0100223	2 C
R411	100Ω	0100101	2, 3 B
R412	1.5kΩ	0100152	2, 3 B
R413	33kΩ	0100333	2 B
R414	220kΩ	0100224	1 A
R415	10kΩ	0100103	1 A
R416	10kΩ	0100103	1 A
R417	220kΩ	0100224	2 A
R418	220kΩ	0100224	1 A
R419	10kΩ	0100103	1 A
R420	10kΩ	0100103	1 A
R421	220kΩ	0100224	1 A
R422	56kΩ	0100563	2 A
R423	56kΩ	0100563	1 A
R426	10kΩ	0100103	2 A
R427	10kΩ	0100103	1 A
R428	100kΩ	0100104	2 A
R429	100kΩ	0100104	1 A
R430	33kΩ	0100333	2 A
R431	33kΩ	0100333	2 A
R432	68kΩ	0100683	2 A
R433	68kΩ	0100683	1, 2 A
R434	4.7kΩ ±10% ¼W CR.	0100472	2 A
R435	4.7kΩ	0100472	1 A
R436	100Ω	0101101	1, 2 A
R437	100kΩ	0100104	2 B
R438	100kΩ	0100104	2 A
R439	3.3kΩ	0100332	2 A, B
R440	3.3kΩ	0100332	2 A
R441	4.7kΩ	0101472	2 A
R442	4.7kΩ	0100472	2 A
R443	22kΩ	0100223	3 A
R444	22kΩ	0100223	3 A
R445	1MΩ	0100105	3 C
R446	3.3kΩ	0100332	2 C
R447	68Ω	0100680	2 C
R448	3.3kΩ	0100332	3 C
R449	22kΩ	0100223	3 C
R450	220kΩ	0100224	3 C
R451	100kΩ	0100104	3 C
R452	47kΩ	0100473	3 C
R453	47Ω	0100470	3 C
R454	47kΩ	0100473	3 B
R455	1kΩ	0100102	3 B
R456	10kΩ	0100103	2 B
R457	1kΩ	0100102	3 B
R458	3.9kΩ	0100392	3 B
R461	47kΩ	0100473	3 B
R462	47kΩ	0100473	2 B
R463	10kΩ	0100103	2, 3 B
R464	4.7kΩ	0100472	3 A
R465	47Ω	0100470	3 B
R466	220kΩ	0100224	2 B
R467	4.7kΩ	0100472	2 B
R468	47kΩ	0101473	2, 3 B

W	X	Y	Z
R469	150kΩ ±10% ¼W CR.	0101154	1 C
VR401	47kΩ(B) MPX Separation Adj.	1035170	2 A
VR403	220kΩ(B) FM Stereo Indicator Adj.	1035210	3 C
C401	68pF ±10% 50 V CC.	0660680	1, 2 C
C402	10μF 25 V EC.	0513100	1 C
C403	100pF	0620101	2 C
C404	4700pF ± 5% 50 V SC.	0620472	2 C
C405	6800pF	0620682	1 C
C406	1μF 50 V EC.	0515109	2, 3 B
C407	10μF 25 V EC.	0513100	1 B
C408	560pF ± 5% 50 V SC.	0620561	1 A
C409	560pF	0620561	1 A
C410	0.15μF ±10% 50 V MC.	0601158	1 A
C411	0.15μF	0601158	1 A
C412	1500pF ± 5% 50 V SC.	0620152	2 A
C413	1500pF	0620152	1 A
C416	10μF 25 V EC.	0513100	2 A
C417	10μF	0513100	1 A
C418	560pF ± 5% 50 V SC.	0620561	2 A
C419	10μF 25 V EC.	0513100	2 A
C420	10μF	0513100	2 A
C421	0.0022μF	0601226	2 A
C422	0.0022μF	0601226	2 A
C423	0.0022μF ± 5% 50 V MC.	0601226	3 A
C424	0.0022μF	0601226	3 A
C425	0.0022μF	0601226	3 A
C426	0.0022μF	0601226	3 A
C427	0.022μF $^{+80}_{-20}$% 50 V CC.	0650223	3 C
C428	0.68μF 25 V AEC.	0563688	3 C
C429	10μF 25 V EC.	0513100	2 B
C433	47μF 25 V EC.	0513470	2 B, C
C434	1μF 50 V EC.	0515100	2 B
C435	1μF 25 V AEC.	0563109	2 B
TR401	2SC871(F)	0305472	1 C
TR402	2SA562(Y)	0300221	2 B
TR403	2SC871(F)	0305472	2 A
TR404		0305472	1 A
TR405		0305472	1 A, B
TR406		0305472	1 A
TR407	2SC733 (O, Y)	0305370, 1	3 A
TR408		0305370, 1	3 A
TR409	2SC711 (E, F)	0305731, 2	2 C
TR410	2SC733 (O, Y)	0305370, 1	3 C
TR411		0305370, 1	3 B, C
TR412	2SC711 (G)	0305733	3 B
TR413	2SC711 (E, F)	0305731, 2	3 B
TR414	2SC735 (O, Y)	0305640, 1	3 B
TR415	2SA562 (O, Y)	0300220, 1	3 B
TR416	2SC711 (E, F)	0305731, 2	3 B
TR417	2SC711 (E, F)	0305731, 2	2 B
D401	IN34A	0310400	2 C
D402		0310400	2 C
D403	IN34A (Y)	0310401	1, 2 B
D404		0310401	1, 2 B
D405		0310401	1 B
D406		0310401	1 B
D407	IN34A	0310400	3 C
L401	MPX Coil	4240510	1 C
L402	2.2mH Micro Inductor	4900090	2 C
L403	1mH Micro Inductor	4900120	2 C
L404	MPX Coil	4240400	3 A
L405		4240400	3 A
LC401	MPX Coil	4240490	1, 2 B C
LC402		4240050	1 B

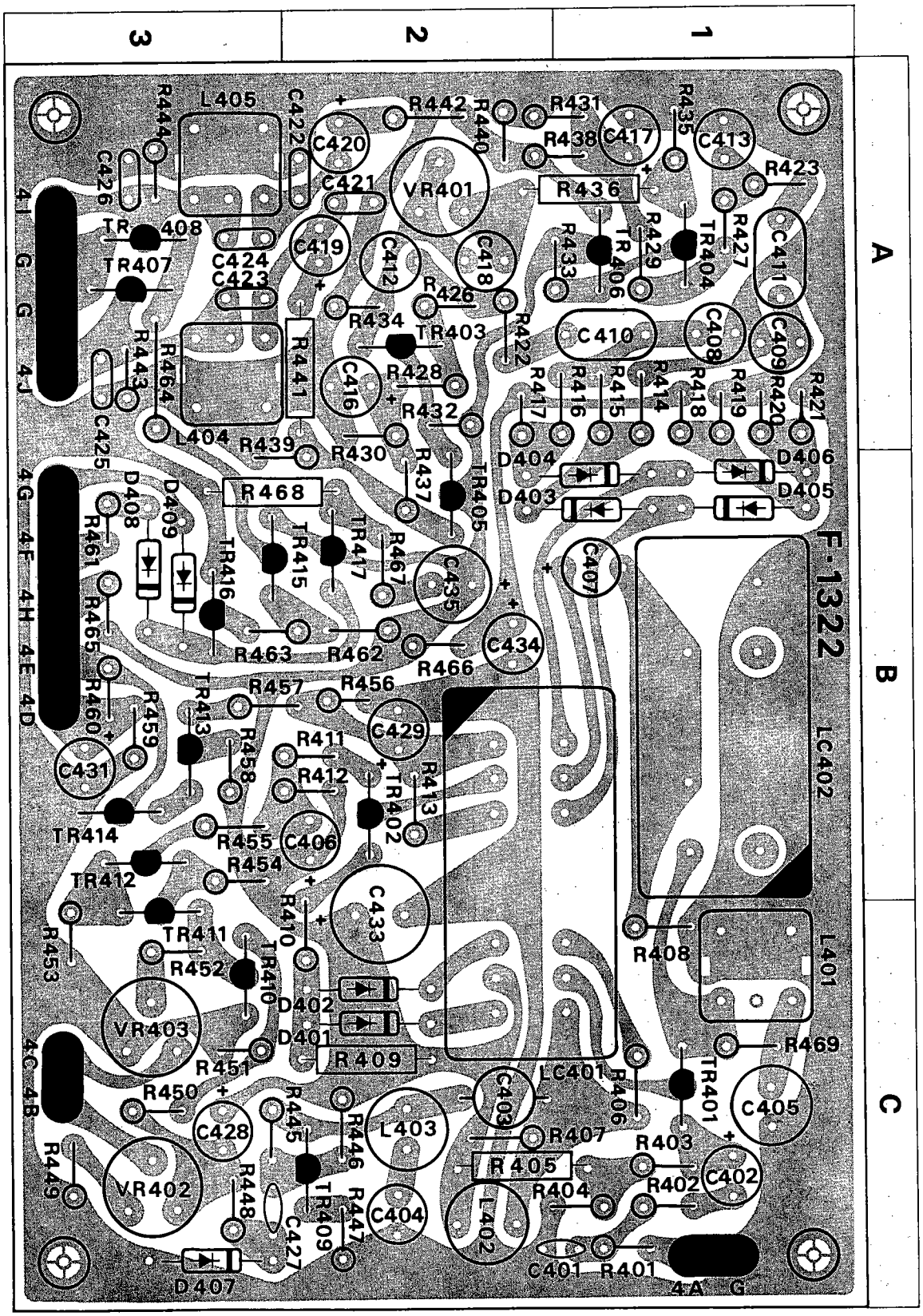
F-1322
LC402
LC401
L401
L402
L403
L404
L405
VR401
VR402
VR403
TR401
TR402
TR403
TR404
TR405
TR406
TR407
TR408
TR409
TR410
TR411
TR412
TR413
TR414
TR415
TR416
TR417
R401
R402
R403
R404
R405
R406
R407
R408
R409
R410
R411
R412
R413
R414
R415
R416
R417
R418
R419
R420
R421
R422
R423
R426
R427
R428
R429
R430
R431
R432
R433
R434
R435
R436
R437
R438
R439
R440
R441
R442
R443
R444
R445
R446
R447
R448
R449
R450
R451
R452
R453
R454
R455
R456
R457
R458
R459
R460
R461
R462
R463
R464
R465
R466
R467
R468
R469
C401
C402
C403
C404
C405
C406
C407
C408
C409
C410
C411
C412
C413
C416
C417
C418
C419
C420
C421
C422
C423
C424
C425
C426
C427
C428
C429
C431
C433
C434
C435
D401
D402
D403
D404
D405
D406
D407
D408
D409
4A
G
4B
4C
4D
4E
4H
4F
4G
4J
G
4I
A
B
C
1
2
3

PRINTED CIRCUIT BOARDS AND PARTS LIST

W: Parts No. **X:** Parts Name **Y:** Stock No. **Z:** Position of Parts

W	X	Y	Z
R715	270kΩ ±10% ¼W CR.	0101274	2 B
R716	270kΩ ±10% ¼W CR.	0101274	3 B
R717	2.7kΩ ±10% ¼W CR.	0101272	2 B
R718	2.7kΩ ±10% ¼W CR.	0101272	3 B
R719	8.2kΩ ±10% ¼W CR.	0101822	2 A
R720	8.2kΩ ±10% ¼W CR.	0101822	2 A
R721	10kΩ ±10% ¼W CR.	0101103	3 A
R722	10kΩ ±10% ¼W CR.	0101103	3 A
R723	6.8kΩ ±10% ¼W CR.	0101682	3 B
R724	6.8kΩ ±10% ¼W CR.	0101682	3 B
R725	22kΩ ±10% ¼W CR.	0101223	3 A
R726	22kΩ ±10% ¼W CR.	0101223	3 A
R727	10kΩ ±10% ¼W CR.	0101103	3 A
R728	10kΩ ±10% ¼W CR.	0101103	3 A
R729	6.8kΩ ±10% ¼W CR.	0101682	3 A
R730	6.8kΩ ±10% ¼W CR.	0101682	3 A
R731	150kΩ ±10% ¼W CR.	0101154	2 A
R732	150kΩ ±10% ¼W CR.	0101154	3 A
R733	390kΩ ±10% ¼W CR.	0101394	2 A
R734	390kΩ ±10% ¼W CR.	0101394	2 A
R735	560Ω ±10% ¼W CR.	0101561	2 A
R736	560Ω ±10% ¼W CR.	0101561	2 A
R737	5.6kΩ ±10% ¼W CR.	0101562	2 A
R738	5.6kΩ ±10% ¼W CR.	0101562	2 A
R739	3.3kΩ ±10% ¼W CR.	0101332	2 A
R740	3.3kΩ ±10% ¼W CR.	0101332	1 A
R741	47kΩ ±10% ¼W CR.	0101473	2 A
R742	47kΩ ±10% ¼W CR.	0101473	2 A
R743	120kΩ ±10% ¼W CR.	0101124	2 A, B
R744	120kΩ ±10% ¼W CR.	0101124	2 A, B
R745	820kΩ ±10% ¼W CR.	0101824	2 A
R746	820kΩ ±10% ¼W CR.	0101824	1 A
R747	470kΩ ±10% ¼W CR.	0101474	2 A
R748	470kΩ ±10% ¼W CR.	0101474	1 A, B
R749	3.9kΩ ±10% ¼W CR.	0101392	1, 2 A
R750	3.9kΩ ±10% ¼W CR.	0101392	1 A
VR501	30kΩ(B) Mic Level Control	1000270	3 C
VR701,702	250kΩ(MN) Balance Control	1010720, 1	3 B, C
VR703,704	250kΩ(B) × 2 Volume Control	1010730, 1	3 B
VR705,706	100kΩ × 2 Treble Control	1020110	3 A
VR707,708	88kΩ × 2 Bass Control	1020100	3 A
C020	220μF 50 V EC.	0515221	1 A
C021	220μF 50 V EC.	0515221	1 A
C022	0.022μF +80 −20% 50 V CC.	0657223	2 A
C023	220μF 50 V EC.	0515221	1 A
C501	1μF 50 V EC.	0515109	3 C
C502	100μF 25 V EC.	0513101	2 C
C503	100pF ±10% 50 V CC.	0601607	3 C
C504	0.06μF ±10% 50 V MC.	0706016	3 C
C505	0.03μF ±10% 50 V MC.	0601307	3 C
C506	100pF ±10% 50 V CC.	0660101	3 C
C507	100pF ±10% 50 V CC.	0660101	2 C
C508	47μF 10 V EC.	0511470	2 C
C509	68pF ±10% 50 V CC.	0660680	2 C
C510	10μF 50 V EC.	0515100	2 C
C511	0.022μF ±10% 50 V MC.	0601227	2 C
C512	1μF RN 50 V EC.	0519101	2 B
C601	0.33μF ±10% 50 V MC.	0601338	
C602	0.33μF ±10% 50 V MC.	0601338	2 B
C603	47μF 10 V EC.	0511470	1 C
C604	47μF 10 V EC.	0511470	1 C
C605	33pF ±10% 50 V CC.	0660330	1 B
C606	33pF ±10% 50 V CC.	0660330	1 B
C607	33μF 6.3 V EC.	0510330	1 B
C608	33μF 6.3 V EC.	0510330	1 B
C609	470pF ±10% 50 V CC.	0660471	1 B
C610	470pF ±10% 50 V CC.	0660471	1, 2 B
C611	0.33μF ±10% 50 V MC.	0601338	1 C
C612	0.33μF ±10% 50 V MC.	0601338	1 C
C613	10μF 25 V EC.	0513100	1 C
C614	10μF 25 V EC.	0513100	1 C
C615	0.0022μF ±10% 50 V MC.	0601226	1 C
C616	0.0022μF ±10% 50 V MC.	0601226	1 C
C617	0.006μF ±10% 50 V MC.	0601606	1 C
C618	0.006μF ±10% 50 V MC.	0601606	1 C
C701	0.008μF ±10% 50 V MC.	0601806	3 B
C702	0.008μF ±10% 50 V MC.	0601806	3 B
C703	0.22μF ±10% 50 V MC.	0601228	2 C
C704	0.22μF ±10% 50 V MC.	0601228	2, 3 C
C705	33μF 6.3 V EC.	0510330	2 B
C706	33μF 6.3 V EC.	0510330	2, 3 B
C707	22pF ±10% 50 V CC.	0660220	2 B
C708	22pF ±10% 50 V CC.	0660220	2 B
C709	0.008μF 50 V MC.	0601806	2 B
C710	0.008μF 50 V MC.	0601806	2 B
C711	33μF 25 V EC.	0513330	2 B
C712	33μF 25 V EC.	0513330	2, 3 B
C713	1μF 50 V EC.	0515109	2 A, B
C714	1μF 50 V EC.	0515109	2 A
C715	0.04μF ±10% 50 V MC.	0601407	3 A
C716	0.04μF ±10% 50 V MC.	0601407	3 A
C717	0.04μF ±10% 50 V MC.	0601407	3 A
C718	0.04μF ±10% 50 V MC.	0601407	3 A
C719	0.0015μF ±10% 50 V MC.	0601156	3 A
C720	0.0015μF ±10% 50 V MC.	0601156	3 A
C721	10μF 25 V EC.	0513100	2 A
C722	10μF 25 V EC.	0513100	2 A
C723	68pF ±10% 50 V CC.	0660680	2, 3 A
C724	68pF ±10% 50 V CC.	0660680	2, 3 A
C725	47μF 6.3 V EC.	0515470	2 A
C726	47μF 6.3 V EC.	0515470	2 A
C727	1μF RN 50 V EC.	0519101	2 A
C728	1μF RN 50 V EC.	0519101	2 A
C729	1μF RN 50 V EC.	0519101	2 A
C730	1μF RN 50 V EC.	0519101	2 A
C731	470pF ±10% 50 V CC.	0660471	1, 2 A
C732	470pF ±10% 50 V CC.	0660471	1, 2 A
C733	1μF 50 V EC.	0515109	1, 2 A
C734	1μF 50 V EC.	0515109	1 A
TR020	2SD223 (R, O, Y)	0308230, 1, 2	1 A
TR501	2SC871R (E, F)	0305474, 5	3 C
TR502	2SC871R (E, F)	0305474, 5	3 C
TR503	2SC871R (E, F)	0305474, 5	2 C
TR504	2SC871R (E, F)	0305474, 5	2 B
TR601	2SC871R (E, F)	0305474, 5	1 B
TR602	2SC871R (E, F)	0305474, 5	1 B
TR603	XA495BL(C,D)	0300162, 3	1 B
TR604	XA495BL(C,D)	0300162, 3	1 B
TR605	2SC871R (E, F)	0305474, 5	1 C
TR606	2SC871R (E, F)	0305474, 5	1 C
TR701	2SC871R (E, F)	0305474, 5	2 B
TR702	2SC871R (E, F)	0305474, 5	2 B
TR703	2SC871R (E, F)	0305474, 5	2 B
TR704	2SC871R (E, F)	0305474, 5	2, 3 B
TR705	2SC871R (E, F)	0305474, 5	2 A
TR706	2SC871R (E, F)	0305474, 5	2 A
TR707	2SC871R (E, F)	0305474, 5	2 A
TR708	2SC871R (E, F)	0305474, 5	1 A
D020	ZBI-25	0310710	1 A

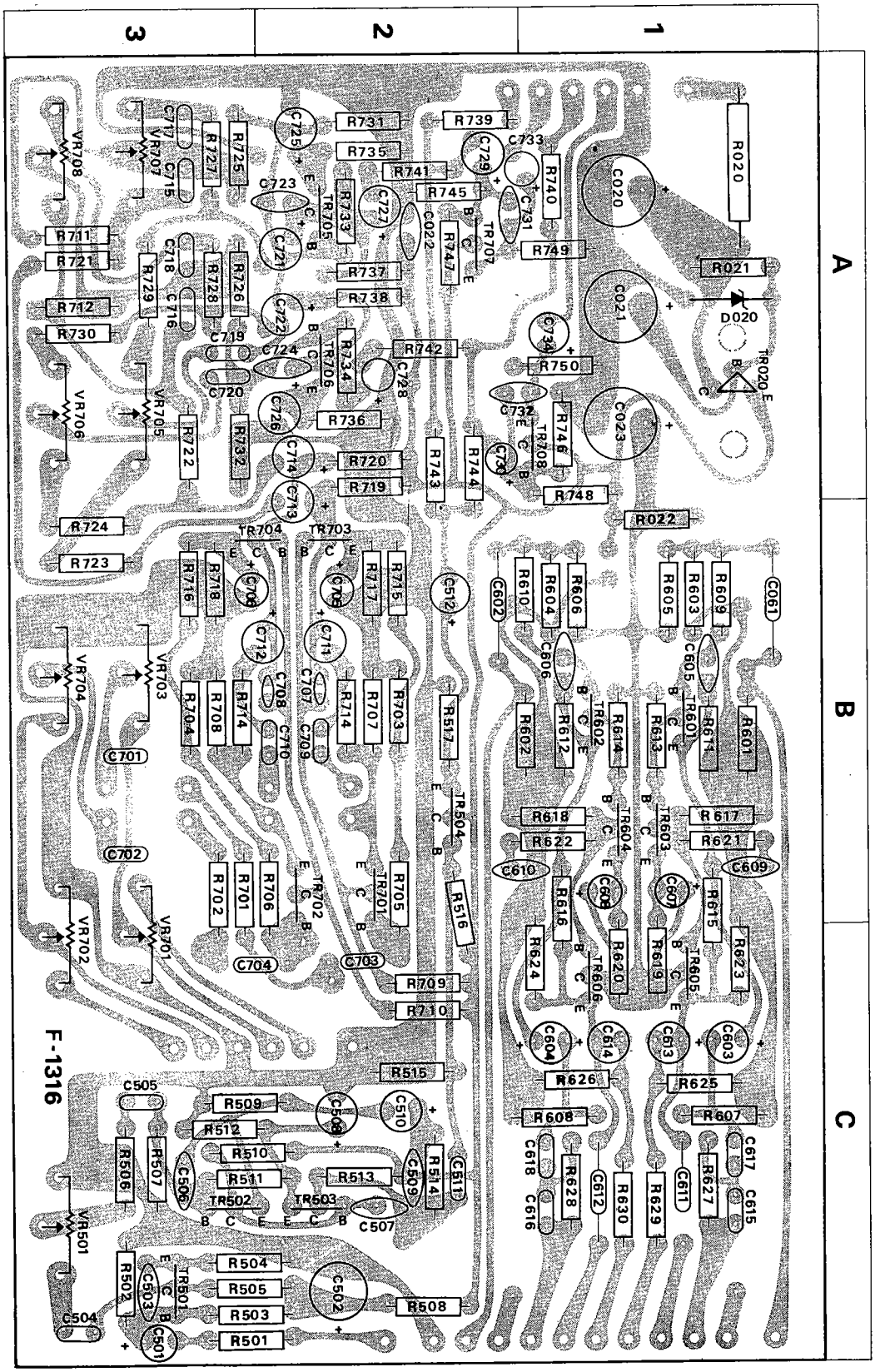
A
B
C
1
2
3
F-1316

PRINTED CIRCUIT BOARDS AND PARTS LIST

W: Parts No. **X:** Parts Name **Y:** Stock No. **Z:** Position of Parts

POWER AND PROTECTOR BLOCK 〈F-1317〉

W	X	Y	Z
R010	820Ω ±10% ½W SR.	0111821	2 A, B
R011	390Ω ±10% 3 W CeR.	0163391	2 B
R012	1kΩ ±10% ½W SR.	0111102	2 A
R013	270Ω ±10% 2 W CeR.	0162271	2 B
R901	4.7kΩ ±10% ¼W CR.	0101471	1 B
R902	4.7kΩ	0101471	1 B
R903	4.7kΩ	0101471	1 B
R904	4.7kΩ	0101471	1 B
R905	47kΩ	0101473	1 A, B
R906	10kΩ	0101103	1 A, B
R907	1kΩ	0101102	1 A
R908	12kΩ	0101123	1 A
R909	3.9kΩ	0101392	1 A
R910	4.7kΩ	0101472	1 A
R911	4.7kΩ	0101472	1 A
R912	4.7kΩ	0101472	1 A
VR901	5kΩ(B)	1031090	1 B
VR902	5kΩ(B)	1031090	1 B
C010	0.022μF +80%/−20% 50 V CC.	0650223	1 A, B
C011	220μF 50 V EC.	0515221	2 A, B
C012	220μF 50 V EC.	0515221	2 B

W	X	Y	Z
C014	0.022μF +80%/−20% 50 V CC.	0650223	2 A
C015	0.022μF +80%/−20% 50 V CC.	0650223	2 A
C016	220μF 25 V EC.	0513221	2 A
C017	220μF 50 V EC.	0515221	2 B
C901	1μF 50 V EC.	0515109	1 B
C902	1μF 50 V EC.	0515109	1 B
C903	0.01μF ±10% 50 V MC.	0601107	1 B
TR010	2SD223 (O, Y, G)	0308230, 1, 2	1 B
TR011	2SD223 (O, Y, G)	0308230, 1, 2	1 A
TR901	2SC711 (E, F)	0305731, 2	1 A, B
TR902	2SC711 (E, F)	0305731, 2	1 A, B
TR903	2SA628 (E, F)	0300282, 3	1 A
D010	ZBI-12	0310641	2 A
D011	ZBI-25	0310710	2 A, B
D012	10DC1	0310680	1 B
D901	IN60	0310331	1 B
D902	IN60	0310331	1 B
SCR901	2SF656	0350020	1 A
L010	Micro Inductor 3.3μH	4900100	2 A

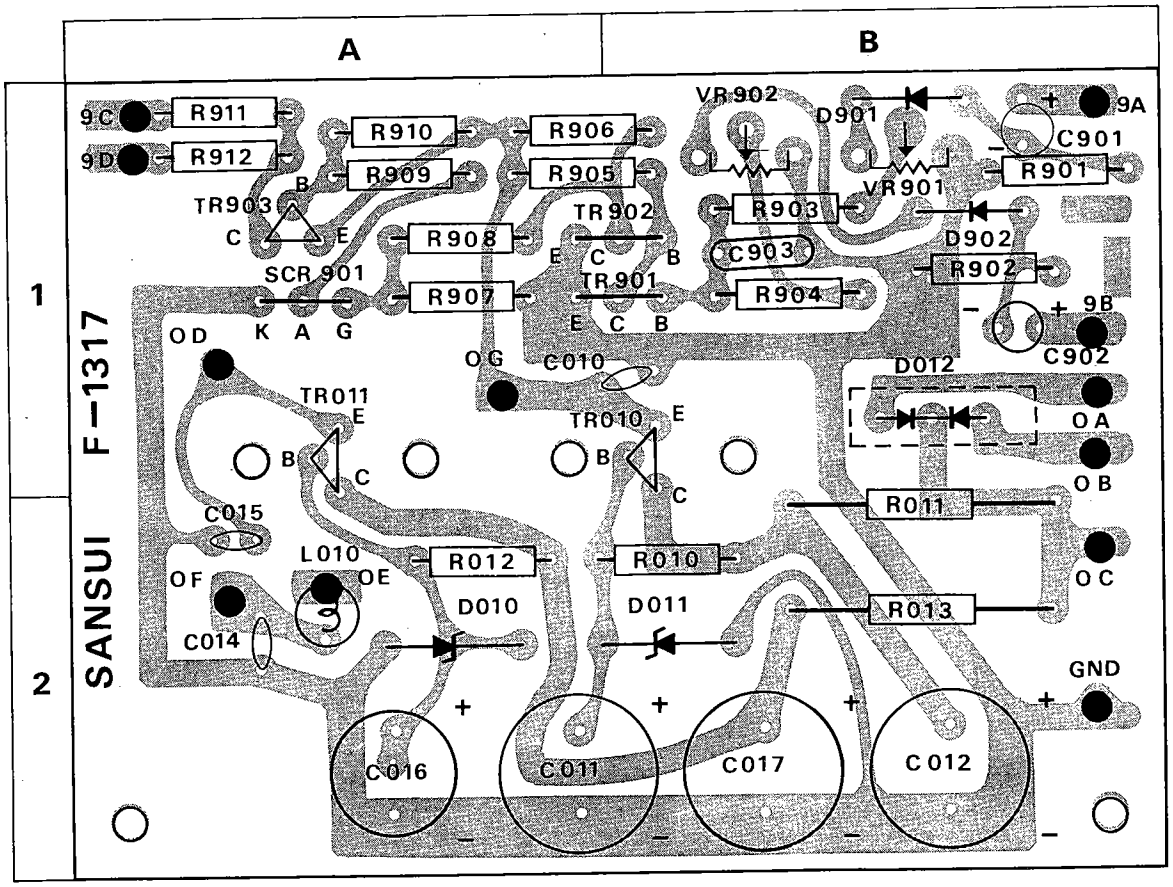

PRINTED CIRCUIT BOARDS AND PARTS LIST

W: Parts No. **X:** Parts Name **Y:** Stock No. **Z:** Position of Parts

DRIVER BLOCK 〈F-1315〉

W	X	Y	Z
R801	10kΩ ±10% ¼W CR.	0101103	1 A
R802	470kΩ	0101474	1 A
R803	270kΩ	0101274	1 A
R804	560kΩ	0101564	1 A
R805	100Ω	0101101	1 A
R806	2.2kΩ	0101222	1 A
R807	3.9kΩ	0101392	1 A
R808	33kΩ	0101333	2 A
R809	3.3kΩ	0101332	1, 2 A
R810	10kΩ	0101103	1 B
R811	100kΩ	0101104	1 B
R812	680Ω ±10% ½W SR.	0111681	2 B
R813	220Ω	0101221	1 A, B
R814	1.5kΩ ±10% ¼W CR.	0101152	1 B
R815	3.3kΩ	0101332	1 B
R816	6.8kΩ ±10% ½W SR.	0111682	1 B
R817	39Ω ±10% ¼W CR.	0101390	1 B
R818	220Ω	0111221	2 B
R819	10Ω	0111100	2 B
R820	220Ω ±10% ½W SR.	0111221	2 A
R821	6.8Ω	0111689	2 A
R822	6.8Ω	0111689	2 B

W	X	Y	Z
R823	4.7Ω ±10W 2 W CeR.	0152479	2 A, B
VR801	100kΩ(B) AC Balance Adj.	1033141	1 B
VR802	1kΩ(B) DC Balance Adj.	1033051	1 B
C801	0.33μF ±10% 50 V MC.	0601338	1 A
C802	100μF 25 V EC.	0513101	1 A
C803	100pF ±10% 50 V CC.	0660101	1 A
C804	220μF 6.3 V EC.	0510221	1 A
C805	4.7μF 50 V EC.	0515479	1 A
C806	3.3μF ±20% 25 V AEC.	0563339	1 A
C807	100μF 50 V EC.	0515101	1 B
C808	100pF ±10% 50 V CC.	0660101	1 B
C809	470μF 6.3 V EC.	0510471	1 B
C810	0.1μF ±10% 50 V MC.	0601108	2 A
TR801	2SC711 (E, F)	0305731, 2	1 A
TR802	2SC871R (F)	0305475	1 A
TR803	2SC627 (3)	0305582	1 A
TR804	2SC984 (C)	0305872	1 B
TR805	2SC680 Blue (B, C)	0305621, 2	2 A
TR806	2SA566 (B, C)	0300151, 2	2 B

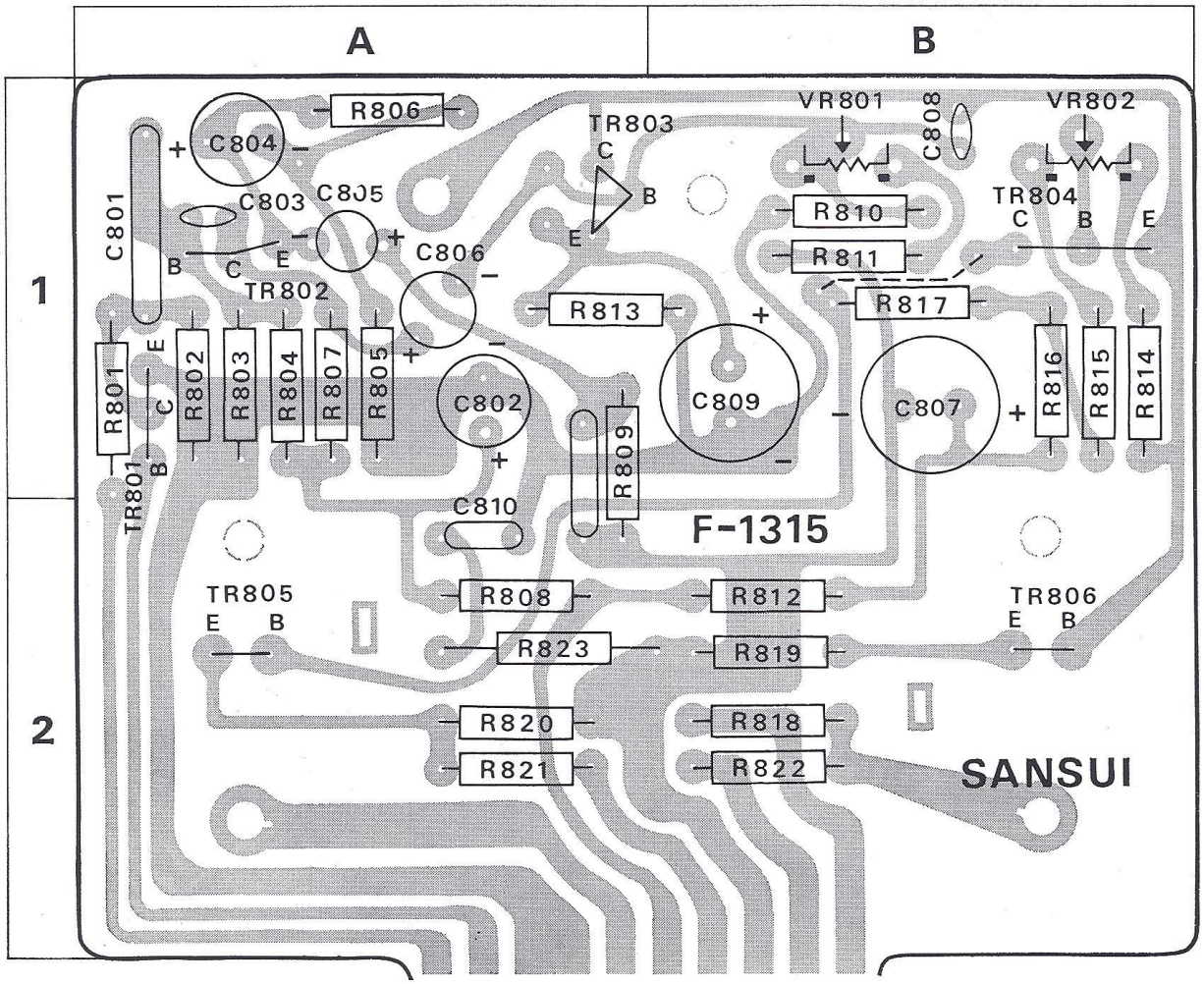

OTHER PARTS AND THEIR POSITION ON CHASSIS

W: Parts No. **X:** Parts Name **Y:** Stock No.

W	X	Y
R001	18Ω ±10% ½W SR.	0111180
R002	12kΩ ±10% ½W SR.	0111123
R032	47Ω ±10% ¼W CR.	0101470
R033	2.2kΩ ±10% ¼W CR.	0101222
R034	4.7Ω ±10% 2 W CeR.	0162479
R247	680kΩ ±10% ¼W CR.	0101684
R338	100Ω ±10% ¼W CR.	0101101
R527	10Ω ±10% ¼W CR.	0101100
R631	470kΩ ±10% ¼W CR.	0101474
R632	470kΩ ±10% ¼W CR.	0101474
R633	100kΩ ±10% ¼W CR.	0101104
R634	100kΩ ±10% ¼W CR.	0101104
R635	470kΩ ±10% ¼W CR.	0101474
R636	470kΩ ±10% ¼W CR.	0101474
R637	100kΩ ±10% ¼W CR.	0101104
R638	100kΩ ±10% ¼W CR.	0101104
R640	100Ω ±10% ¼W CR.	0101101
R641	100Ω ±10% ¼W CR.	0101101
R761	39kΩ ±10% ¼W CR.	0101394
R762	39kΩ ±10% ¼W CR.	0101394
R825	0.7Ω ±10% 7 W CeR.	0157688
R826	0.7Ω ±10% 7 W CeR.	0157688
R827	0.7Ω ±10% 7 W CeR.	0157688
R828	0.7Ω ±10% 7 W CeR.	0157688
R829	150Ω ±10% 5 W CeR.	0155151
R830	150Ω ±10% 5 W CeR.	0155151
R831	470Ω ±10% 2 W CeR.	0162471
R832	470Ω ±10% 2 W CeR.	0162471
VR402	100kΩ(B) Muting Adjustor	1005042
C001	0.033μF 600V OC.	0591337
C002	0.0047μF 600V OC.	0591476
C003	220μF 10V EC.	0511221
C004	1000μF 50V EC.	0559302
C005	3300μF 100V EC.	0559831
C006	100μF 100V EC.	0507101
C007	0.01μF +80 −20% 500V CC.	0659011
C032	220μF 50V EC.	0515221
C235	0.022μF +80 −20% 50V CC.	0657223
C619,620	0.047μF × 4 50V CC.	0800121
C739	3.3μF RN 50V EC.	0519102
C740	3.3μF RN 50V EC.	0519102
C811	2200μF 80V EC.	0559830
C812	2200μF 80V EC.	0559830
C813	0.1μF 250V MPC.	0592108
C814	0.1μF 250V MPC.	0592108
VC301~303	3 Gang AM Variable Condenser	1200020
TR001	2SC627(3)	0305582
TR807	2SC1116(R,O,Y)	0305840, 1, 2
TR808	2SC1116(R,O,Y)	0305840, 1, 2
TR809	2SC1116(R,O,Y)	0305840, 1, 2
TR810	2SC1116(R,O,Y)	0305840, 1, 2
D001	DS10BN-M	0310920
D002	SRIFM2	0310870
S1(a~j)	Selector Switch Y-5-14-6	1105070, 1
S3(a~f)	Speakers Switch Y-2-2-6	1102260, 1

W	X	Y
S12	Power Limiter Switch	1160100
S13	Power Switch	1130350
J501	Microphone Jack	2430110
DIN J601	DIN Jack	2430040
DIN J602	DIN Jack	2430040
J601	Tape Recording Jack	2430110
J801	Headphones Jack	2430010
PU001	Voltage Selector Plug	2410170
	Main Voltage Selector Plug	2410180
	Sub Voltage Selectar Plug	2410190
CO001	AC Outlet	2450040
CO002	AC Outlet	2450040
T001	Power Transformer 400-5474	4000910
T101	Balun 75Ω : 300Ω	4290021
T306	AM Bar Antenna	4300380
L301	Micro Inductor 100μH	4900110
M001	Tune Meter ±100μA	4300320
M002	Signal Meter 200μA	4300310
PL006	5V 0.06A Needle Indicator	0400100
PL007	7V 0.2A Signal Meter Lamp	0400150
PL008	6V 0.1A Phono 2 Indicator	0400160
PL009	6V 0.1A Phono 1 Indicator	0400160
PL010	7V 0.2A Tune Meter Lamp	0400150
PL011	6V 0.1A FM Indicator	0400160
PL012	6V 0.1A AM Indicator	0400160
PL013	6V 0.1A AUX Indicator	0400160
F001	3A Fuse (220~250V)	0431260
	5A Fuse (100~127V)	0431280
F801	5A Quick Acting Fuse	0433280
F802	5A Quick Acting Fuse	0433280
F-1323	FM Front End	7510400

OTHER PARTS AND THEIR POSITION ON CHASSIS

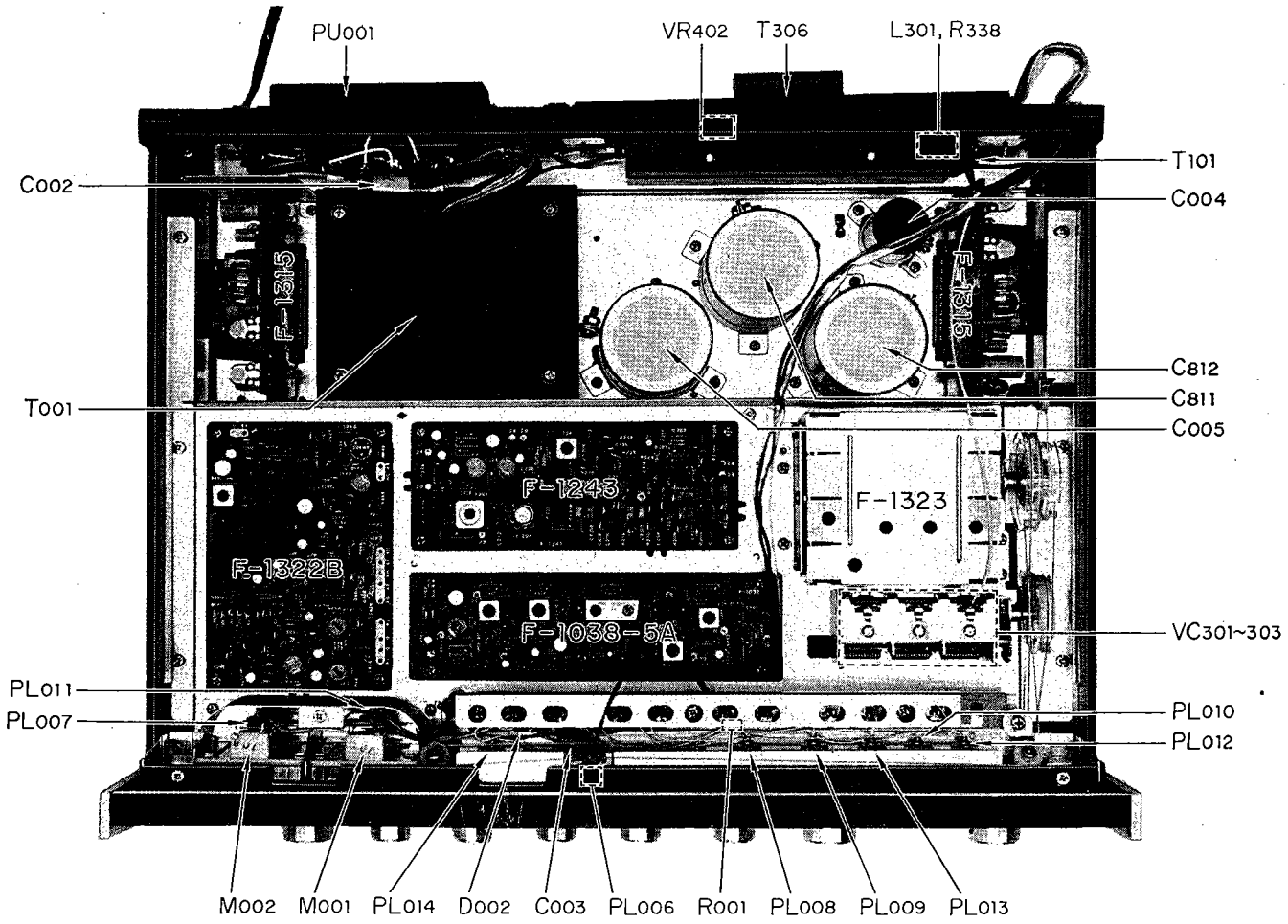

SANSUI 7000 SCHEMATIC DIAGRAM

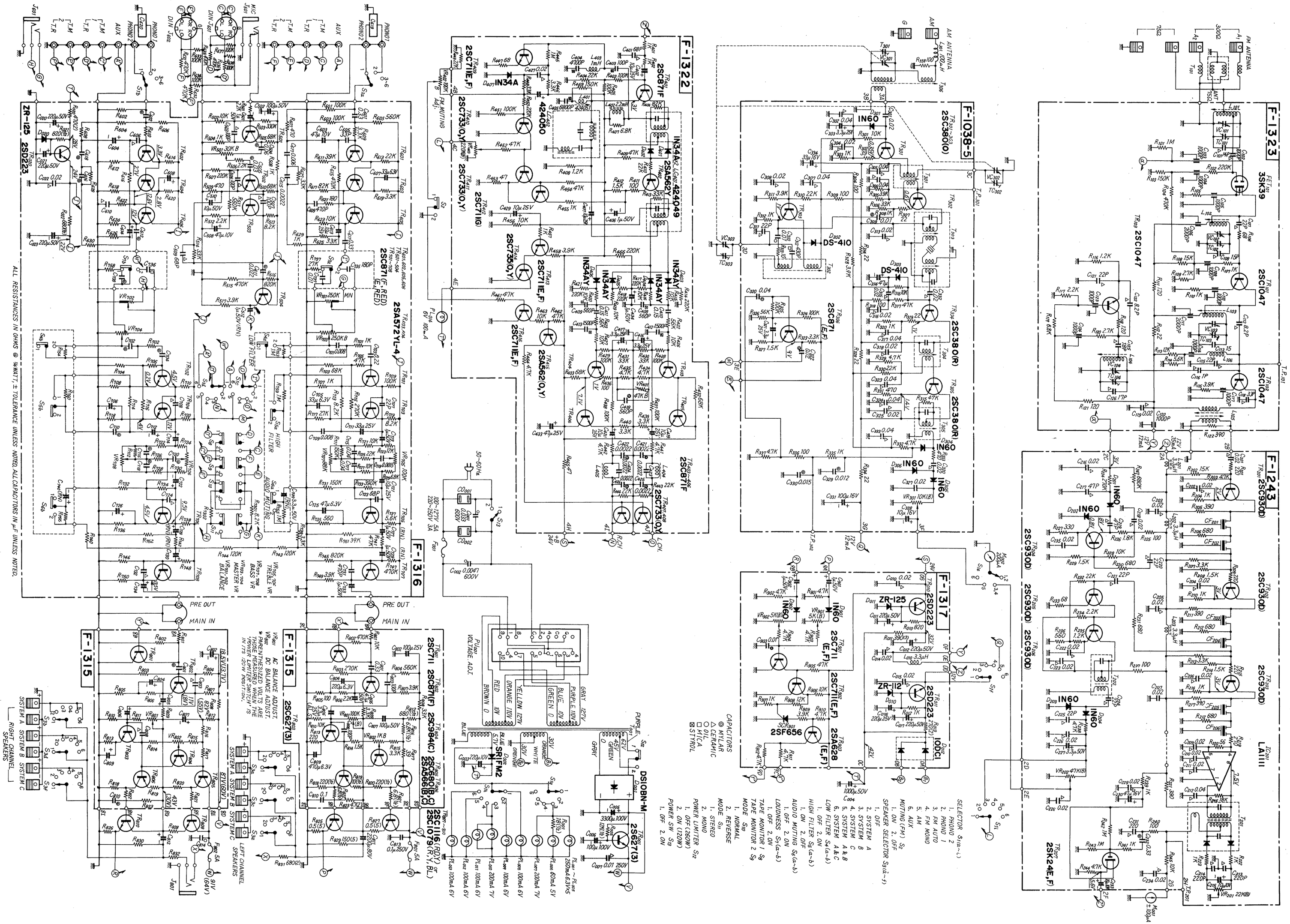

* Manufacturer reserves right to change design and/or specifications without notice for purpose of improvement.

SANSUI ELECTRIC COMPANY LIMITED
Printed in Japan (11050M)

SANSUI 7000 SCHEMATIC DIAGRAM

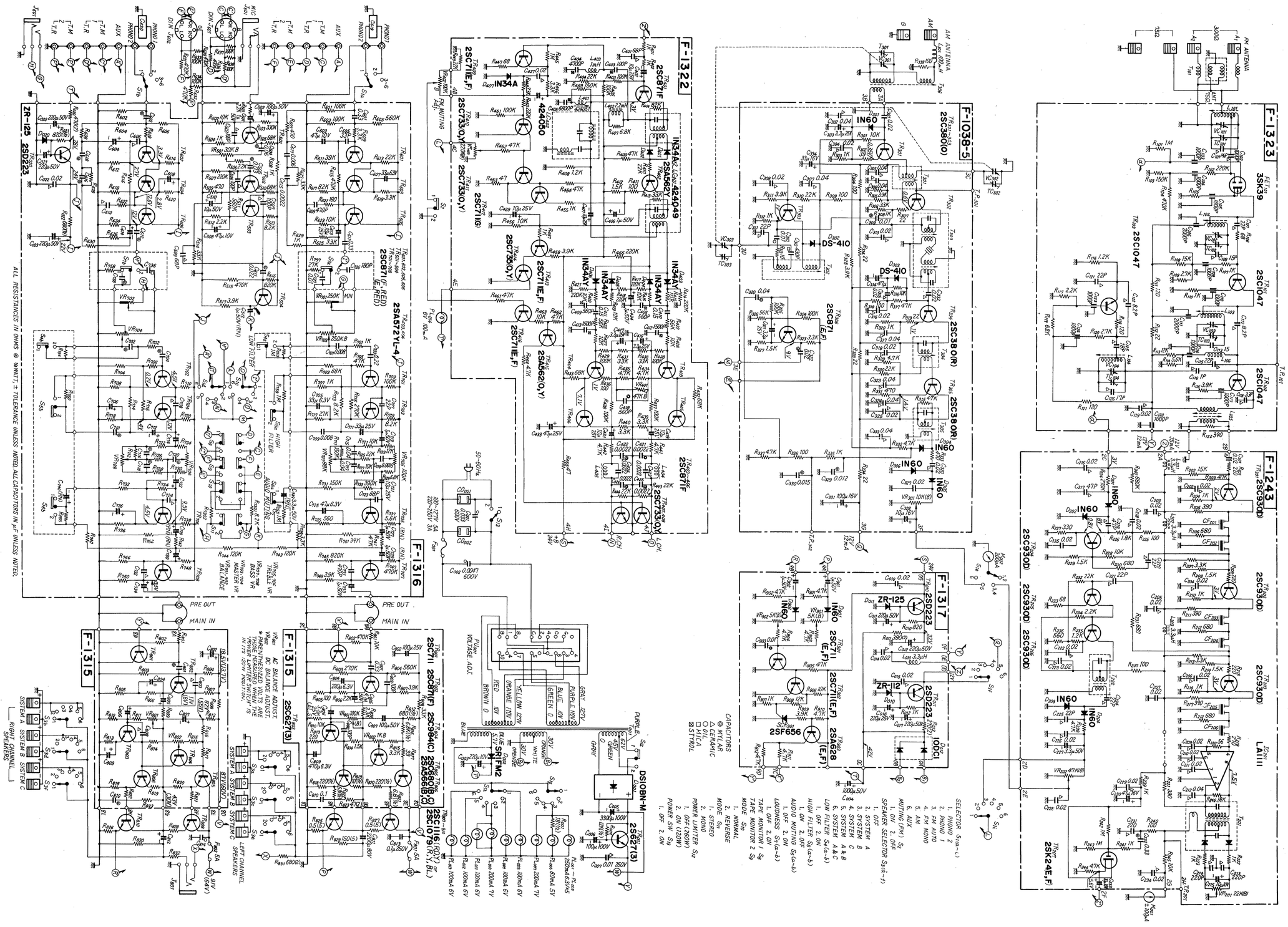

* Manufacturer reserves right to change design and/or specifications without notice for purpose of improvement.

SANSUI ELECTRIC COMPANY LIMITED
Printed in Japan (11050M)