SERVICE MANUAL

4-CHANNEL RECEIVER

SANSUI QRX-5500A
QRX-7500A

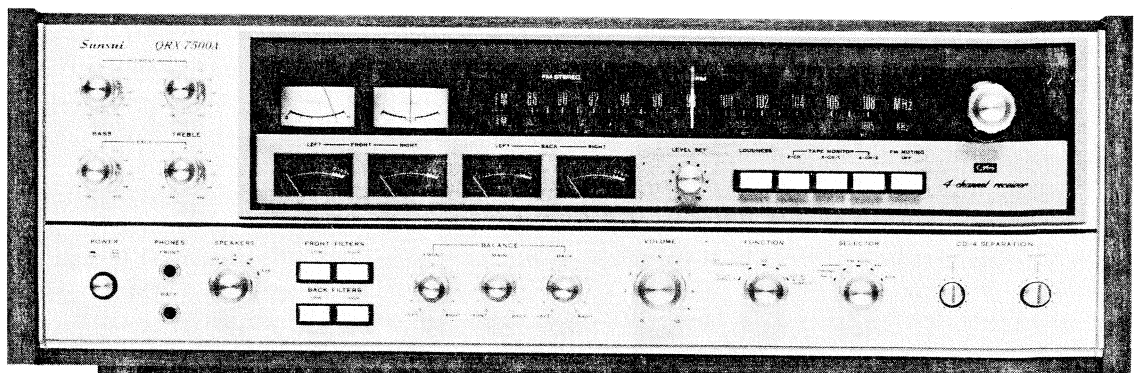

Sansui

SANSUI ELECTRIC CO., LTD.

This service manual is designed for service engineers to repair, adjust, maintain and order the replacement parts of the QRX-5500A, QRX-7500A correctly.
When ordering the parts, use the stock number and parts name specifically referring to the Parts Location and Parts Lists.
For general usage and maintenance of the unit, please refer to the Operating Instructions attached with the unit.

TABLE OF CONTENTS

1. SPECIFICATIONS

1-1. QRX-5500A

AUDIO SECTION

POWER OUTPUT
Min. RMS, all channels driven, from 20 to 20,000Hz, with no more than 0.5% total harmonic distortion
27 watts per channel into 8 ohms
LOAD IMPEDANCE .....8 ohms
POWER BANDWIDTH .....20 to 20,000Hz at or rated min. RMS power output and total harmonic distortion
TOTAL HARMONIC DISTORTION
OVERALL (from AUX) ....less than 0.5% at or rated min. RMS power output
INTERMODURATION DISTORTION
(70Hz: 7,000Hz=4:1 SMPTE method)
OVERALL (from AUX) ....less than 0.5% at rated min. RMS power output
DAMPING FACTOR 40 (8Ω)
INPUT SENSITIVITY AND IMPEDANCE
(1,000Hz, for rated power output)
2-CHANNEL PHONO-1, 2..2.5mV 50kΩ
(Max. input capability; 250mV at 0.5% distortion)
2-CHANNEL TAPE
PLAY Pin Jacks 100mV 50kΩ
REC/PLAY DIN Socket ..100mV 50kΩ
4-CHANNEL AUX 100mV 50kΩ
4-CHANNEL TAPE-1, 2
PLAY Pin Jacks 100mV 50kΩ
MIC (monophonic) 2.5mV 10kΩ
RECORDING OUTPUT
2-CHANNEL TAPE
REC Pin Jacks 100mV
REC/PLAY DIN Socket ..30mV
4-CHANNAL TAPE-1, 2
REC Pin Jacks 100mV
FREQUENCY RESPONSE (at 1 Watt output)
OVERALL (from 4-CHANNEL AUX)
.....30 to 30,000Hz $^{+1.0}_{-1.5}$dB
EQUALIZATION (RIAA curve)
.....30 to 15,000Hz ±1.0dB
CROSSTALK (FUNCTION control: 2-CH, 1,000Hz)
.....better than 50dB
HUM AND NOISE (IHF)
2-CHANNEL PHONO.....better than 70dB
4-CHANNEL AUX .....better than 80dB
SWITCHES AND CONTROLS
BASS .....+12dB, −12dB at 50Hz
TREBLE .....+12dB, −12dB at 15,000Hz
LOUDNESS .....+8dB at 50Hz
+3dB at 10,000Hz
LOW FILTER .....−10dB at 50Hz (6dB/oct.)
HIGH FILTER .....−10dB at 10,000Hz (6dB/oct.)
SYNTHESIZER/DECODER ....QS regular matrix system with QS vario-matrx circuit.

TUNER SECTION

<FM>
TUNING RANGE .....88 to 108MHz
SENSITIVITY (IHF) 1.9μV
(DIN).....1.1μV
(Max. input capability: 120dB)
SIGNAL TO NOISE RATIO (mono)
.....better than 65dB
CAPTURE RATIO (IHF).....less than 2.0dB
IMAGE REJECTION .....better than 75dB
IF REJECTION .....better than 90dB
SPURIOUS RESPONSE REJECTION
.....better than 80dB
SELECTIVITY .....better than 60dB
TOTAL HARMONIC DISTORTION
Mono .....less than 0.3%
Stereo .....less than 0.5%
STEREO SEPARATION .....better than 37dB
FREQUENCY RESPONSE ....30 to 15,000Hz $^{+1.0}_{-3.0}$dB
ANTENNA IMPEDANCE ....300Ω balanced, 75Ω unbalanced

<AM>
TUNING RANGE .....535 to 1,605kHz
SENSITIVITY (bar antenna) .50dB/m
IMAGE REJECTION .....better than 80dB
IF REJECTION .....better than 80dB
SELECTIVITY 25dB

OTHERS

POWER REQUIREMENTS
Voltage.....100, 120, 220, 240V 50/60Hz
Consumption .....140W (rated), 400VA (max.)
DIMENSIONS .....594mm (23 3/8") W
203mm (8") H
370mm (14 9/16") D
WEIGHT .....21.6 kg (47.5 lbs) Net
24.8 kg (54.6 lbs) Packed

* Design and specifications subject to change without notice for improvements.

1-2. QRX-7500A

AUDIO SECTION

POWER OUTPUT
Min. RMS, all channels driven, from 20 to 20,000Hz, with no more than 0.3% total harmonic distortion.
30 watts per channel into 8 ohms
Min. RMS, all channels driven, at 1kHz, with no more than 0.3% total harmonic distortion
35 watts per channel into 8 ohms

LOAD IMPEDANCE .....8 ohms
POWER BANDWIDTH .....20 to 20,000Hz at or rated min. RMS power output and total harmonic distortion
TOTAL HARMONIC DISTORTION
OVERALL (from AUX) ....less than 0.3% at or rated min. RMS power output
INTERMODURATION DISTORTION
(70Hz: 7,000Hz=4:1 SMPTE method)
OVERALL (from AUX) ....less than 0.3% at rated min, RMS power output
DAMPING FACTOR 40 (8Ω)
INPUT SENSITIVITY AND IMPEDANCE
(1,000Hz, for rated power output)
2-CHANNEL PHONO-1, 2
.....2.5mV 50kΩ
(Max. input capability; 150mV at 0.5% distortion)
2-CHANNEL TAPE
PLAY Pin Jacks 100mV 50kΩ
REC/PLAY DIN Socket ..100mV 50kΩ
4-CHANNEL AUX-LOW ..100mV 50kΩ
AUX-HIGH ..200mV 100kΩ
4-CHANNEL TAPE-1, 2
PLAY Pin Jacks 100mV 50kΩ
RECORDING OUTPUT
2-CHANNEL TAPE
REC Pin Jacks 100mV
REC/PLAY DIN Socket ..30mV
4-CHANNEL TAPE-1, 2
REC Pin Jacks 100mV
FREQUENCY RESPONSE (at 1 Watt output)
OVERALL (from 4-CHANNEL AUX)
.....30 to 30,000Hz $^{+1.0}_{-1.5}$dB
EQUALIZATION (RIAA curve)
.....30 to 15,000Hz ±1.0dB
CROSSTALK (FUNCTION control: 2-CH, 1,000Hz)
.....better than 50dB
HUM AND NOISE (IHF)
2-CHANNEL PHONO.....better than 70dB
4-CHANNEL AUX .....better than 80dB
SWITCHES AND CONTROLS
BASS .....+12dB, −12dB at 50Hz
TREBLE .....+12dB, −12dB at 15,000Hz
LOUDNESS .....+8dB at 50Hz, +3dB at 10,000Hz
LOW FILTER .....−10dB at 50Hz (6dB/oct.)
HIGH FILTER .....−10dB at 10,000Hz (6dB/oct.)

SYNTHESIZER/DECODER ....QS regular matrix system with QS vario-matrix circuit.
CD-4 DEMODULATOR
Input Sensitivity.....2.5mV (1 to 10mV adjustable)
Input Impedance 50kΩ
Frequency Response (STD test signal)
Main-Channel.....30 to 15,000Hz $^{+0.5}_{-3.0}$dB
Sub-Channel .....30 to 10,000Hz $^{+1.0}_{-5.0}$dB

TUNER SECTION

<FM>
TUNING RANGE.....88 to 108MHz
SENSITIVITY (IHF) 1.9μV
(DIN).....1.1μV
(Max. input capability: 120dB)
SIGNAL TO NOISE RATIO (mono)
.....better than 65dB
CAPTURE RATIO (IHF).....less than 2.0dB
IMAGE REJECTION .....better than 75dB
IF REJECTION .....better than 90dB
SPURIOUS RESPONSE REJECTION
.....better than 80dB
SELECTIVITY .....better than 60dB
TOTAL HARMONIC DISTORTION
Mono .....less than 0.3%
Stereo .....less than 0.5%
STEREO SEPARATION .....better than 37dB
FREQUENCY RESPONSE ....30 to 15,000Hz $^{+1.0}_{-3.0}$dB
ANTENNA IMPEDANCE ....300Ω balanced, 75Ω unbalanced

<AM>
TUNING RANGE .....535 to 1,605kHz
SENSITIVITY (bar antenna) ..50dB/m
IMAGE REJECTION .....better than 80dB
IF REJECTION .....better than 80dB
SELECTIVITY 25dB

OTHERS

POWER REQUIREMENTS
Voltage.....100, 120, 220, 240V 50/60Hz
Consumption .....140W (rated), 400VA (max.)
DIMENSIONS .....594mm (23⅜") W
203mm (8") H
370mm (14⁹⁄₁₆") D
WEIGHT .....22.4 kg (48.0 lbs.)
25.0 kg (55.0 lbs.)

* Design and specifications subject to change without notice for improvements.

Sansui

2. BLOCK DIAGRAM / 2-1. QRX-5500A

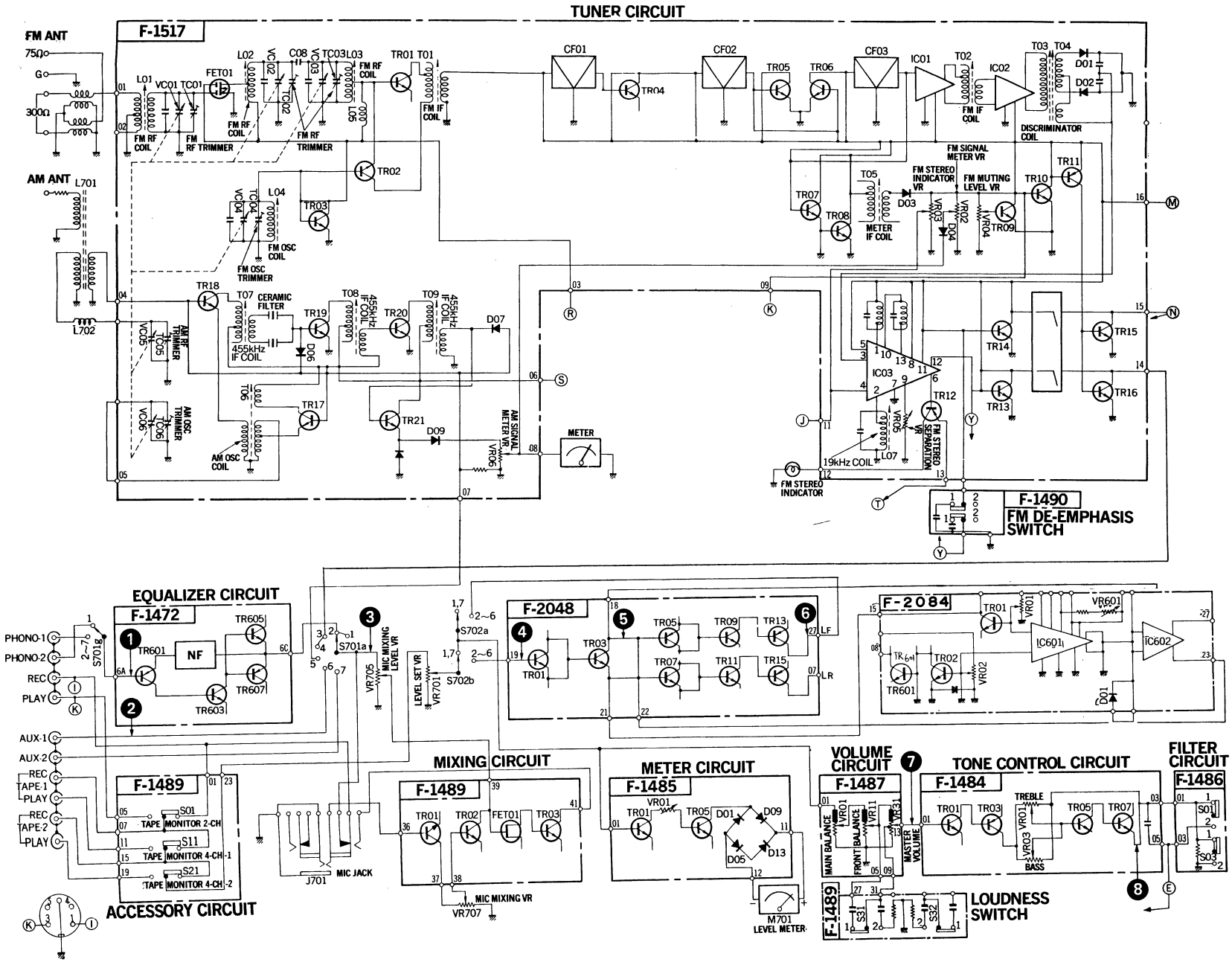

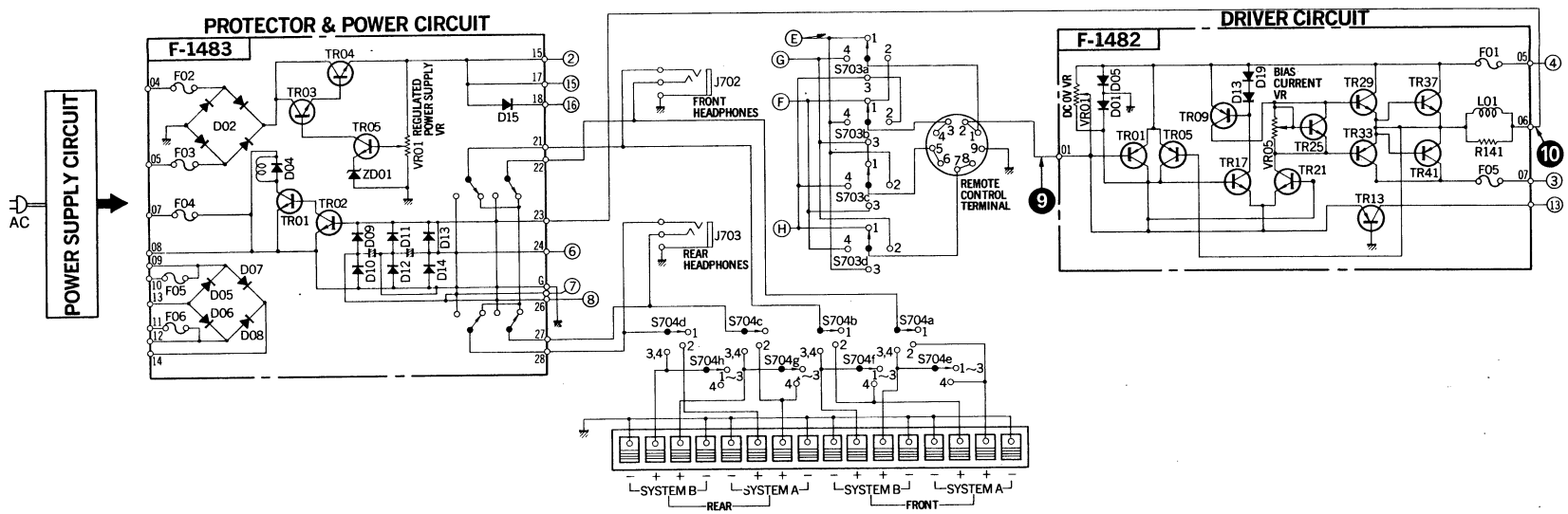

S01~04: TAPE MONITOR
2-CH
1. OFF
2. ON

S01, 02: LOW FILTER
1. OFF
2. ON

S03, 04: HIGH FILTER
1. OFF
2. ON

S01, 02: FM DE-EMPHASIS
1. 75μs
2. 50μs

S11~14: TAPE MONITOR
4-CH-1
1. OFF
2. ON

S21~24: TAPE MONITOR
4-CH-2
1. OFF
2. ON

S31~34: LOUDNESS
1. OFF
2. ON

S41 : FM MUTING
1. OFF
2. ON

S701a~o : SELECTOR
1. PHONO-2
2. PHONO-1
3. FM AUTO
4. FM MONO
5. AM
6. 4-CH AUX-1
7. 4-CH AUX-2

S702a~t : FUNCTION
1. 2-CH
2. QS SYNTHESIZER HALL
3. QS SYNTHESIZER SURROUND
4. QS REGULAR MATRIX HALL
5. QS REGULAR MATRIX SURROUND
6. PHASE MATRIX
7. DISCRETE

S703a~d : DIRECTION
1. NORMAL
2. RIGHT QUARTER TURN
3. HALF TURN
4. LEFT QUARTER TURN

S704a~h : SPEAKER
1. OFF
2. A
3. B
4. A+B

TUNER CIRCUIT

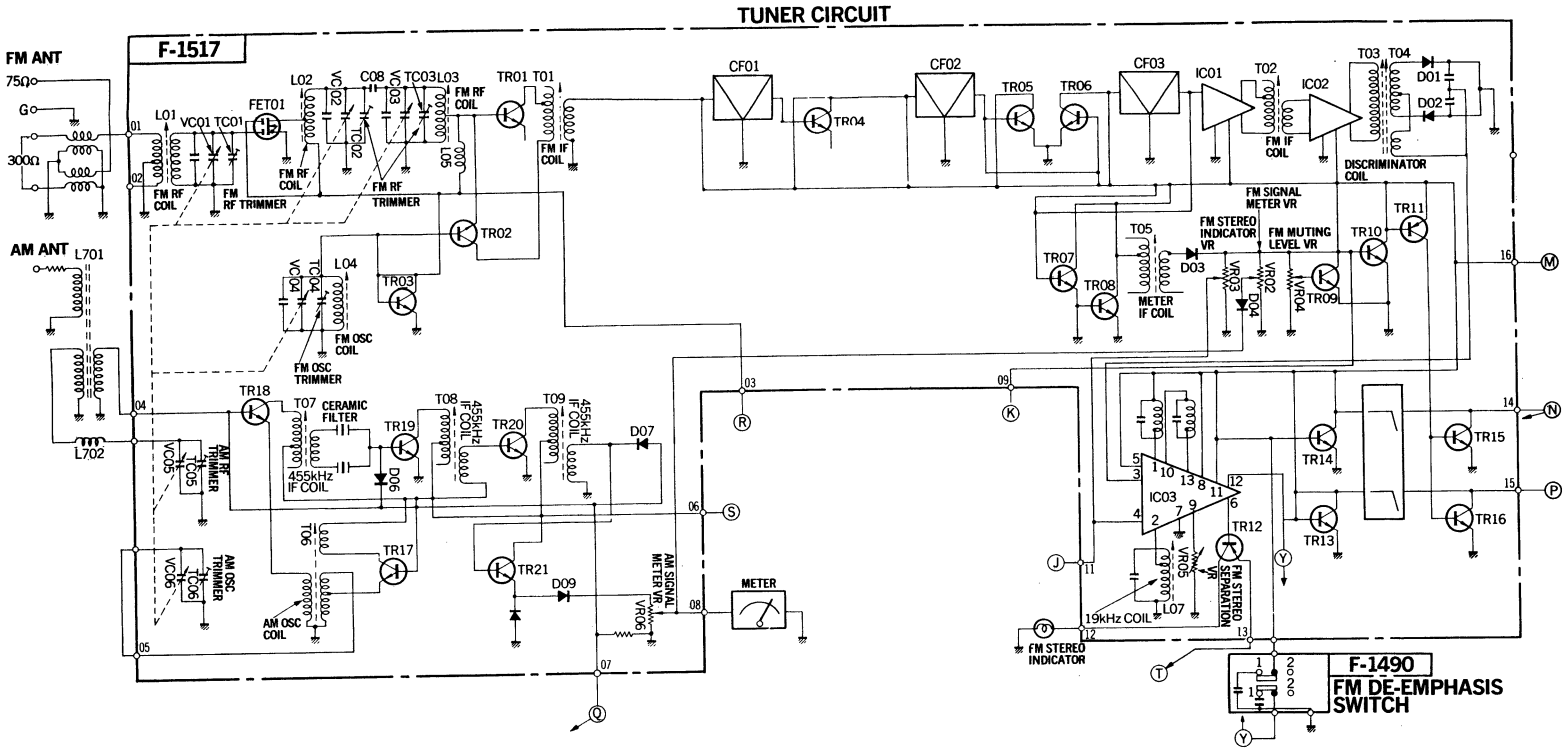

F-2589 EQUALIZER & CD-4 CIRCUIT

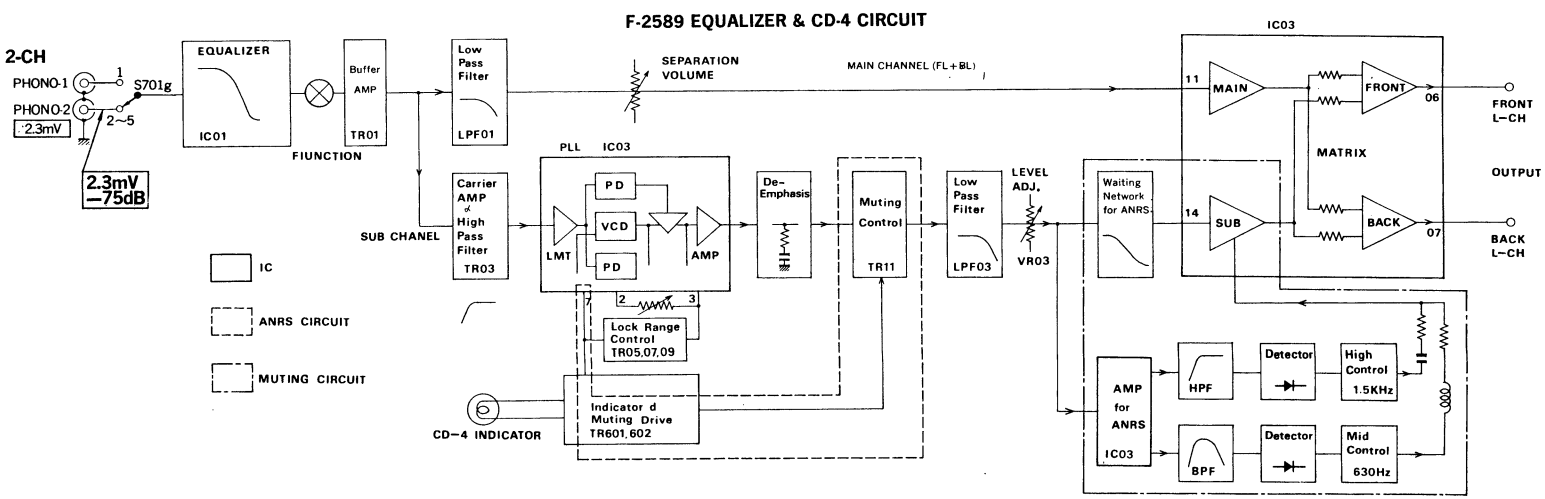

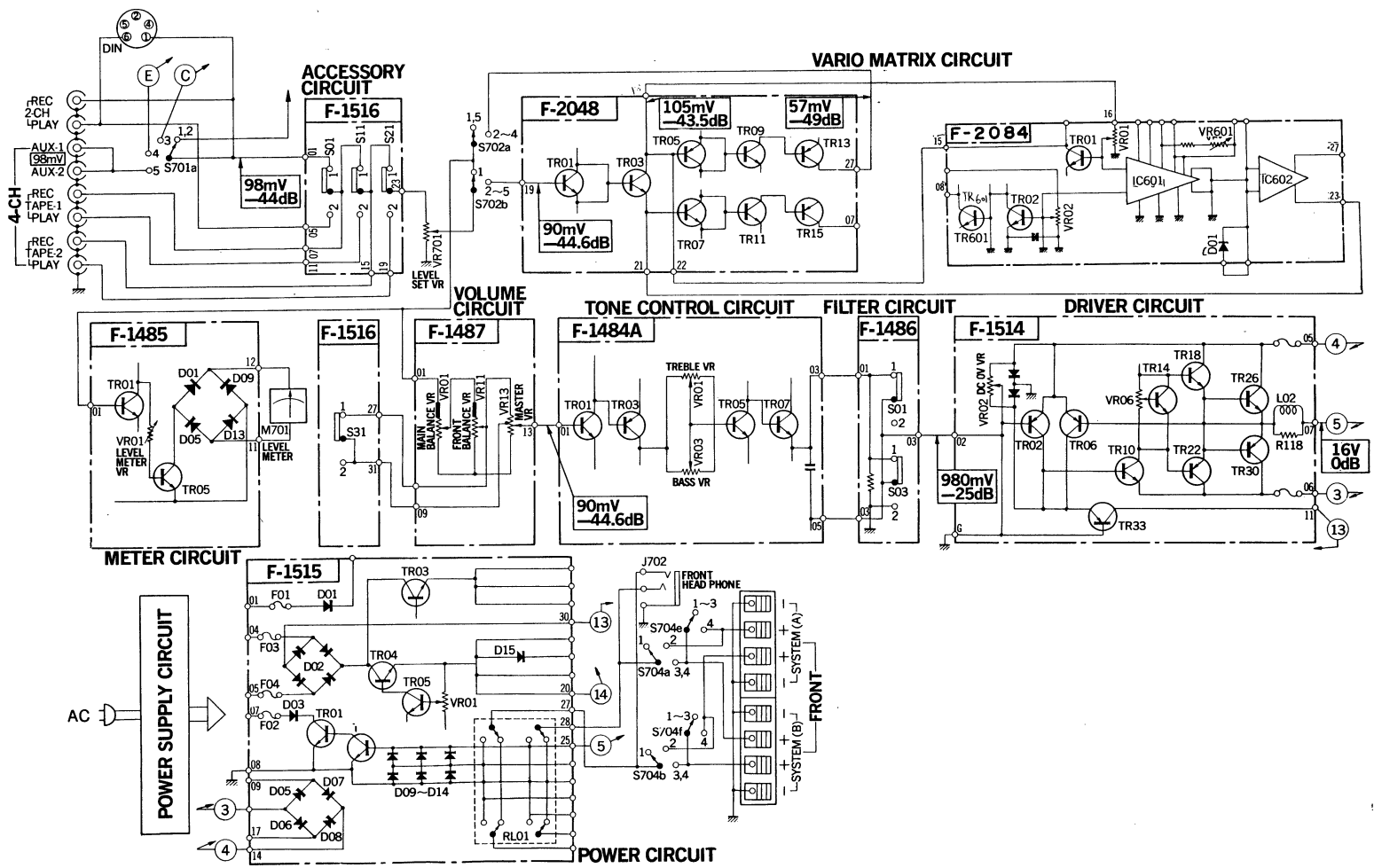

S701(a~o): SELECTOR
1. PHONO-2
2. PHONO-1
3. FM AUTO
4. AM
5. AUX

S702(a~t): FUNCTION
1. 2-CH
2. QS SYNTHESIZER
3. QS REGULAR MATRIX
4. PHASE MATRIX
5. DISCRETE/CD-4

S01~04: TAPE MONITOR 2-CH
1. OFF
2. ON

S11~14: TAPE MONITOR 4-CH
1. OFF
2. ON

S21~24: TAPE MONITOR 4-CH
1. OFF
2. ON

S31~34: LOUDNESS
1. OFF
2. ON

S01,02: LOW FILTER
1. OFF
2. ON

S03,04: HIGH FILTER
1. OFF
2. ON

S41: FM MUTING
1. ON
2. OFF

S01,02: FM DE-EMPHASIS
1. 75μS
2. 50μS

S704(a~h): SPEAKER
1. OFF
2. A
3. B
4. A+B

Sansui

3. ALIGNMENTS AND ADJUSTMENTS
(QRX-5500A, QRX-7500A Common)

Abbreviation

Equipment

AM FM Generator Oscilloscope.....Genescope
AM Standard Signal Generator .....AM SSG
FM Standard Signal Generator .....FM SSG
FM Stereo Generator.....Stereo SG
Oscilloscope .....Scope
Audio Oscillator .....Audio Osci.
Distortion Meter .....Dist. Meter

Others

Clockwise .....CW.
Counterclockwise.....CCW.
Antenna .....ANT.
Modulation.....MOD.

3-1. Regulated Power Supply Board Adjustment (See Fig. 3-1)

Note: 1. Function.....QS Synthesizer
2. Master Volume.....Minimum
3. Confirm the AC Power Supply voltage.

*F-1483.....QRX-5500A
*F-1515.....QRX-7500A

STEP	SUBJECT	EQUIPMENT	MEASURE OUTPUT	ADJUST	ADJUST FOR	CONDITION
1	Regulated Power Supply	DC volt meter	F-1515, F-1483 terminal 18	F-1515 VR01 F-1483	25±0.1V	

3-2. Level Meter Adjustment (See Fig. 3-2)

Note: 1. Function .....Discrete
2. Selector.....AUX-1
3. Master Volume .....Minimum
4. Level Set Volume .....Maximum
5. For adjustment, run the unit for more than 2 minutes after the power is switched on.

STEP	SUBJECT	FEED SIGNAL		MEASURE OUTPUT	ADJUST	ADJUST FOR	CONDITION
		FROM	TO				
1	Level Meter	1kHz Output : 100mV Audio Osci.	FRONT, REAR AUX-1 L, R-ch	Level Meter	F-1485 VR01 (front L-ch) VR02 (front R-ch) VR03 (rear L-ch) VR04 (rear R-ch)	0 level	○Feed signal to 4-CH (both FRONT and REAR)

Fig. 3-1

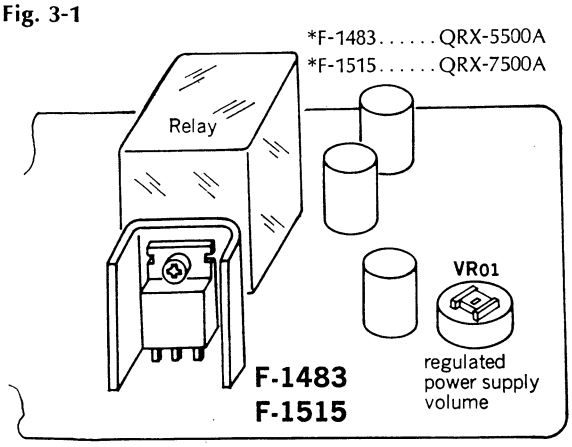

Fig. 3-2

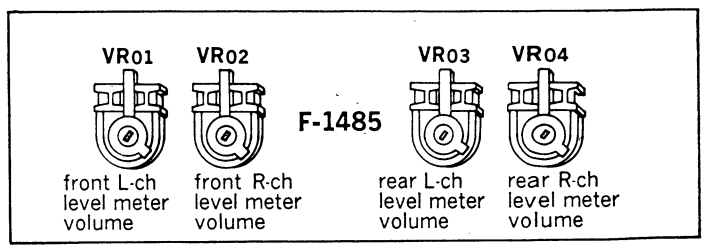

3-3. Driver Circuit Board Adjustment (See Figs. 3-3 and 3-4)

Note: 1. Master Volume.....Minimum
2. Make the SP terminals free (no load).
3. Confirm the AC Power Supply voltage.
4. After adjustment, run the unit for more than 5 minutes, then check and readjust necessary.
5. Room temperature should be 18~28° (65~83°F) for bias current adjustment.

*F-1482.....QRX-5500A
*F-1514.....QRX-7500A

STEP	SUBJECT	EQUIPMENT	MEASURE OUTPUT	ADJUST	ADJUST FOR	CONDITION
1	DC 0V Front L	DC volt meter	Speaker terminal Front L-ch Fig. 3-4	F-1514, F-1482 VR01	0V	o Step down meter's range accordingly
2	DC 0V Front R	Same as above	Speaker terminal Front R-ch Fig. 3-4	F-1514, F-1482 VR02	Same as above	Same as above
3	DC 0V Rear L	Same as above	Speaker terminal Rear L-ch Fig. 3-4	F-1514, F-1482 VR03	Same as above	Same as above
4	DC 0V Rear R	Same as above	Speaker terminal Rear R-ch Fig. 3-4	F-1514, F-1482 VR04	Same as above	Same as above
5	Bias current Front L	DC milliammeter	F-1482, F-1514 F01 Fig. 3-3	F-151,4 F-1482 VR05	25±1mA	o Step down meter's range accordingly
6	Bias current Front R	Same as above	F-1482, F-1514 F02 Fig. 3-3	F-1514, F-1482 VR06	Same as above	Same as above
7	Bias current Rear L	Same as above	F-1482, F-1514 F03 Fig. 3-3	F-1514, F-1482 VR07	Same as above	Same as above
8	Bias current Rear R	Same as above	F-1482, F-1514 F04 Fig. 3-3	F-1514, F-1482 VR08	Same as above	Same as above

Fig. 3-3

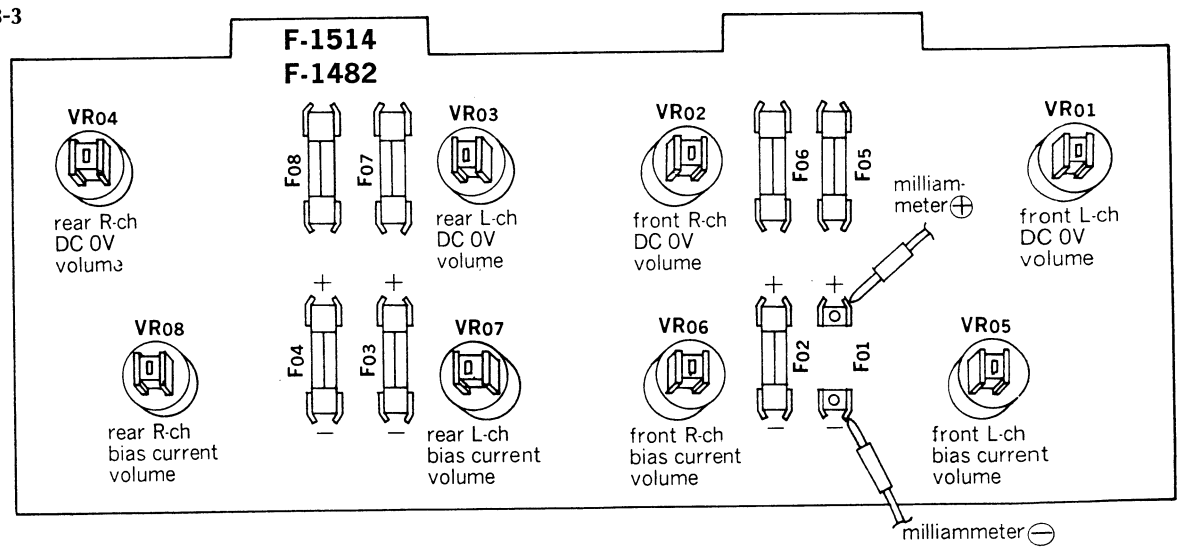

Fig. 3-4

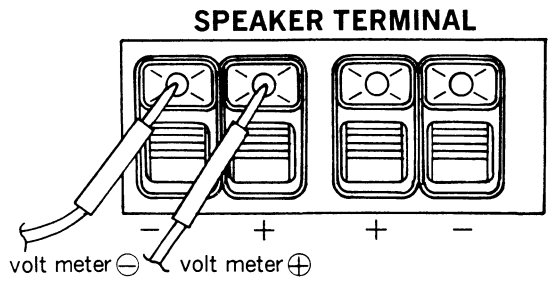

3-4. FM IF Alignment (See Fig. 3-10 on page 10)

Note: 1. Selector.....FM AUTO
2. Master Volume .....Minimum
3. Output level of genescope .....After attenuator
4. Sweepwidth.....1.5~2cm/150kHz
5. Frequency band .....9.5~11.5MHz
6. Connection .....Connect the output of genescope to TP.A through 100pF ceramic capacitor.
7. Before adjustment, turn both VR01 and VR02 CCW (Max.), VR03 CW (Max.) and VR04 to center.

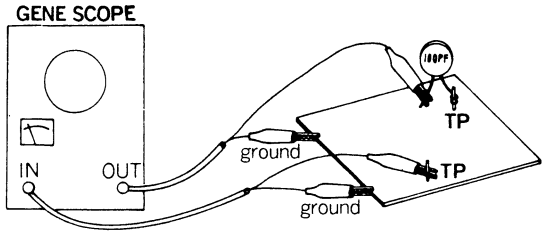

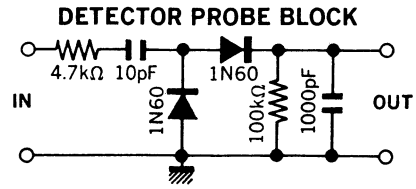

STEP	SUBJECT	FEED SIGNAL FROM	FEED SIGNAL TO	MEASURE OUTPUT	ADJUST	ADJUST FOR	CONDITION
1	IF coil	Output 55dB Genescope	Base of TR01 on F-1517 (Fig. 3-10 TP.A)	Connect Point between R32 & R33 on F-1517 (Fig. 3-10 TP.B) Use Detector Probe	T01	Max. IF waveform 1 as Fig. 3-9	○Turn core of T05 CCW.
2	Meter coil	Same as above	Same as above	Connect Point between R52 & VR02 on F-1517 (Fig. 3-10 TP.D) Direct from Genescope	T05	Max. IF wave-from 2 Set the center of waveform 2 with waveform 1 as Fig. 3-9	
3	Descriminator coil	Same as above	Same as above	Connect Point between R42 & R44 on F-1517 (Fig. 3-10 TP.C) Direct from Genescope	T03 T04	Max. linearity of S curve Set the center of S curve waveform 1 & 2 as Fig. 3-9	
4	IF coil	Same as above		Same as above	T02	Max. noise	

3-5. FM Dial Calibration and RF Alignment (See Fig. 3-10 on page 10)

Note: 1. Selector.....FM AUTO
2. Master Volume .....Minimum
3. FM Muting switch .....OFF (pushed in)
4. Confirm start point of dial pointer before alignment.
5. In Step 3, 4 and 5, readjust items of Step 1, 2 if not correctly, repeat 3, 4 and 5 again.

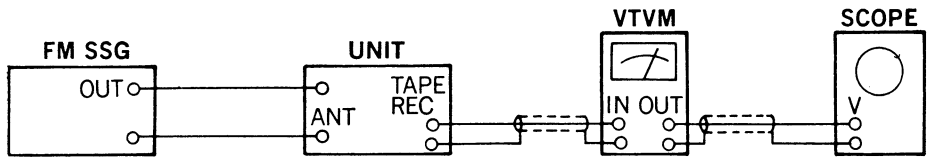

STEP	SUBJECT	FEED SIGNAL FROM	FEED SIGNAL TO	MEASURE OUTPUT	ADJUST	ADJUST FOR	CONDITION
1	88MHz Dial Calibration	88MHz ANT input 60dB 1kHz (100% MOD) FM SSG	ANT terminal 300Ω	REC OUT L or R-ch VTVM & Scope	L04	Max. output	○Set Dial on 88MHz 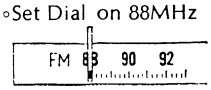
2	108MHz Dial Calibration	108MHz ANT input 60dB 1kHz (100% MOD) FM SSG	Same as above	Same as above	Trimmer Cap. TC04	Same as above	○Set Dial on 108MHz 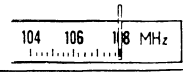

STEP	SUBJECT	FEED SIGNAL		MEASURE OUTPUT	ADJUST	ADJUST FOR	CONDITION
		FROM	TO				
3	Confirm 88MHz Dial Calibration	Same as Step 1	Same as above	Same as above		Confirm 88MHz Dial Calibration	∘IF not, repeat from Step 1
4	Confirm 98MHz Dial Calibration	98MHz ANT input 60dB 1kHz (100% MOD) FM SSG	Same as above	Same as above		Confirm 98MHz Dial Calibration	
5	Confirm 108MHz Dial Calibration	Same as Step 2	Same as above	Same as above		Confirm 108MHz Dial Calibration	∘If not, repeat from Step 2
6	88MHz RF Adj.	88MHz ANT input 10dB 1kHz (100% MOD) FM SSG	Same as above	Same as above	L01, L02, L03	Max. output	∘Tune FM SSG (Max. indication of Signal Meter)
7	108MHz RF Adj.	108MHz ANT input 10dB 1kHz (100% MOD) FM SSG	Same as above	Same as above	Trimmer Cap. TC01, TC02, TC03	Same as above	Same as above

3-6. FM Signal Meter, Mono Distortion, Tune Meter and Muting Adjustment (See Fig. 3-10 on page 10)

Note: 1. Selector.....FM AUTO
2. Master Volume .....Minimum

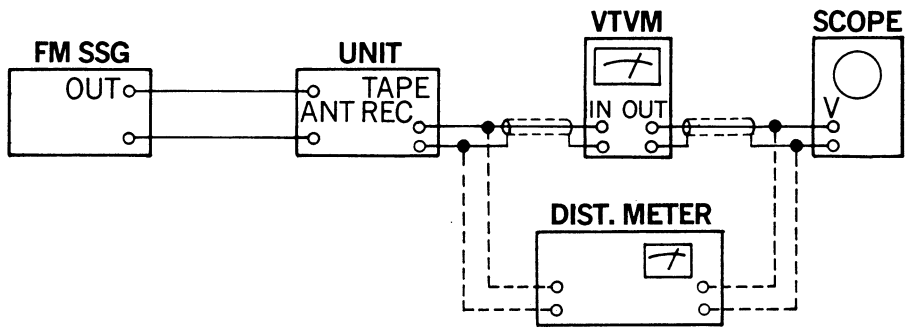

STEP	SUBJECT	FEED SIGNAL		MEASURE OUTPUT	ADJUST	ADJUST FOR	CONDITION
		FROM	TO				
1	Signal Meter	98MHz ANT input 66dB 1kHz (100% MOD) FM SSG	ANT terminal 300Ω	Signal Meter	VR02	4.3 on meter	∘Tune FM SSG (Max. indication of Signal Meter) ∘Before adjustment, if meter swings out or not enough, preadjust VR02 until the reasonable point
2	Distortion	Same as above	Same as above	REC OUT L or R-ch Dist. meter & Scope	T04	Min. distortion	∘Set VR04 to center ∘Tune FM SSG (Max. indication of Signal Meter)
3	Muting Level	98MHz ANT input 25dB 1kHz (100% MOD) FM SSG	Same as above	REC OUT L or R-ch VTVM & Scope	VR04		∘Set FM MUTING switch to OFF (pushed in) ∘Tune the Tune Meter to center and set the muting switch to ON (pushed out)

3-7. MPX Alignment (See Fig. 3-10 on page 10)

Note: 1. Selector .....FM AUTO
2. Master Volume.....Minimum
3. FM MUTING switch .....OFF (pushed in)
4. Before adjustment, turn VR01 CW (Max.) and VR05 to center.

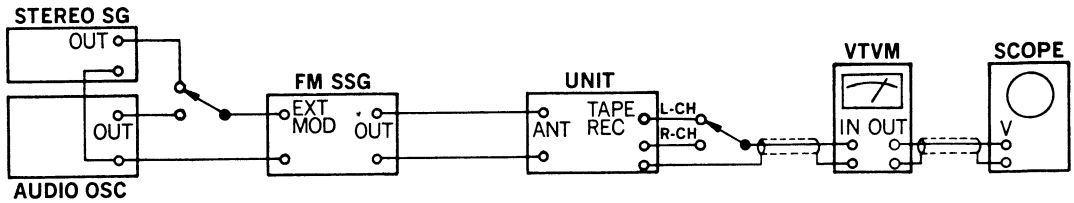

STEP	SUBJECT	FEED SIGNAL		MEASURE OUTPUT	ADJUST	ADJUST FOR	CONDITION
		FROM	TO				
1	19kHz coil	98MHz ANT input 60dB FM SSG Pilot 19kHz (10% MOD) L-ch 1kHz (45% MOD) R-ch (0% MOD) Stereo SG	ANT terminnal 300Ω	REC OUT L-ch VTVM & Scope	L08	Max. output	o Tune FM SSG (Center indication of Tune Meter)
2	Indicator (Lighting level)	98MHz ANT input 31dB FM SSG Pilot 19kHz (10% MOD) Stereo SG	Same as above	Stereo indicator lamp	VR01	Lighting Point	o Tune FM SSG (Center indication of Tune Meter)

3-8. AM IF, Dial Calibration, RF and Signal Meter Alignment (See Figs. 3-6, 3-7, 3-8 and 3-10 on page 10)

Note: 1. Selector.....AM
2. Master Volume .....Minimum
3. Confirm start point of dial pointer before alignment.
4. In case of using loop antenna, increase output of AM SSG for 26dB than bar antenna's direct input as it attenuates input sensitivity for 26dB. (See Fig. 3-5)
5. After adjustment of signal meter, confirm the meter's swing on FM. (If meter swang out or not enough, readjust VR02.) (See Page 3-8)

Fig. 3-5

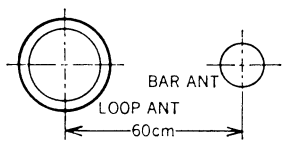

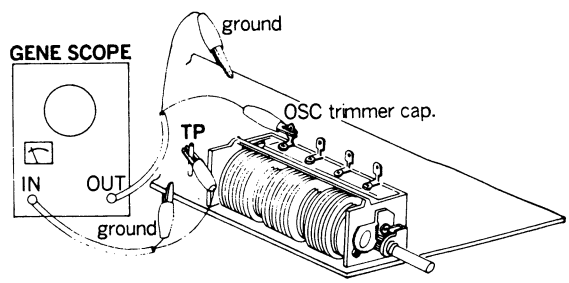

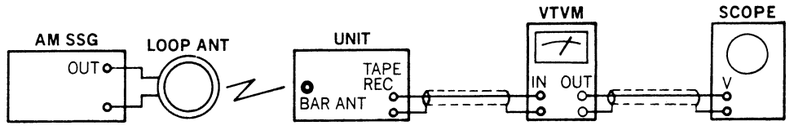

STEP	SUBJECT	FEED SIGNAL FROM	FEED SIGNAL TO	MEASURE OUTPUT	ADJUST	ADJUST FOR	CONDITION
1	IF coil	Output 70dB Genescope	OSC trimmer cap. (TC06) Fig. 3-10	Connect Point between R96 & R106 on F-1517 (Fig. 3-10 TP.E)	T07	Max. IF waveform 1 Fig. 3-6	∘ Turn core T08 & T09 CCW.
2	IF coil	Output 55dB Genescope	Same as above		T08	Max. IF waveform 2 Fig. 3-7	
3	IF coil	Output 45dB Genescope	Same as above		T09	Max. IF waveform 3 Fig. 3-8	∘ If not, readjust T08 & T09 slightly
4	535kHz Dial calibration	535kHz ANT input 60dB 400Hz (30% MOD) AM SSG Use loop ANT	Bar ANT	REC OUT L or R-ch VTVM & Scope	T06	Max. output	∘ If broadcasting station is near, it might be used 535 600
5	1400kHz Dial Calibration	1400kHz ANT input 60dB 400Hz (30% MOD) AM SSG Use loop ANT	Same as above	Same as above	Trimmer Cap. TC06	Same as above	Same as above 1200 1400 1605
6	Confirm 600kHz Dial Calibration	600kHz ANT input 60dB 400Hz (30% MOD) AM SSG Use loop ANT	Same as above	Same as above		Confirm 600kHz Dial Calibration	∘ If not, repeat from Step 4
7	Confirm 1000kHz Dial Calibration	1000kHz ANT input 60dB 400Hz (30% MOD) AM SSG Use loop ANT	Same as above	Same as above		Confirm 1000kHz Dial Calibration	
8	Confirm 1400kHz Dial Calibration	Same as Step 5	Same as above	Same as above		Confirm 1400kHz Dial Calibration	∘ If not, repeat from Step 5
9	600kHz RF Adj.	600Hkz ANT input 50dB 400Hz (30% MOD) AM SSG Use loop ANT	Same as above	Same as above	Bar ANT L702	Max. output	
10	1400kHz RF Adj.	1400kHz ANT input 50dB 400Hz (30% MOD) AM SSG Use loop ANT	Same as above	Same as above	Trimmer Cap. TC05	Same as above	
11	Signal Meter	1000kHz ANT input 100dB 400Hz (30% MOD) AM SSG Use loop ANT	Same as above	Same as above	F-1517 VR06	4 on meter	∘ Tune AM SSG (Max. indication of signal meter) ∘ Before adjustment, if meter swang out or not enough, preadjust VR06 until the reasonable point

Fig. 3-6

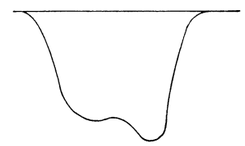

Fig. 3-7

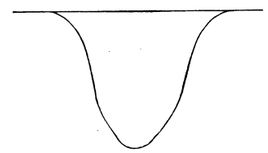

Fig. 3-8

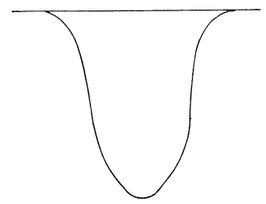

Fig. 3-9

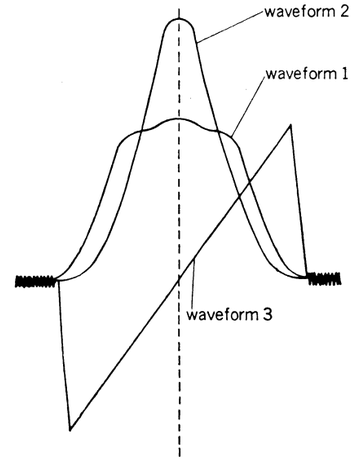

Fig. 3-10

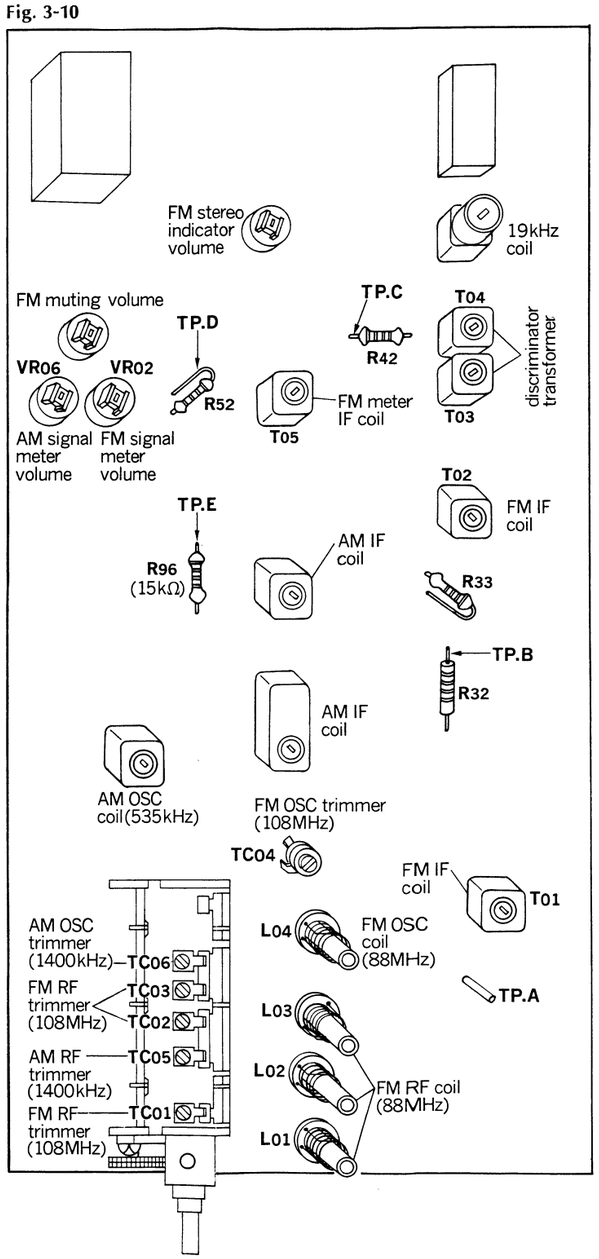

4. PARTS LOCATIONS AND PARTS LIST

4-1. F-1517 Tuner Circuit Board

(Stock No. 7521140 Complete Circuit Board....QRX-5500A)
(Stock No. 7521160 Complete Circuit Board....QRX-7500A)

Parts List

Parts No.	Stock No.	Description	Position
TR01	0305801, 2	2SC1047 (B, C)	1 A
TR02	0305942, 3	2SC710 (C, D)	1 A
TR03	0305790, 1	2SC930 (C, D)	1 B
TR04	0306112, 3	2SC738 (C, D)	1 B
TR05	0306112, 3	2SC738 (C, D)	1 C
TR06	0306112, 3	2SC738 (C, D)	1 C
TR07	0305942, 3	2SC710 (C, D)	1 C, D
TR08	0305942, 3	2SC710 (C, D)	2 C, D
TR09	0305732, 3 or 0305952, 3	2SC711 (F, G) or 2SC945 (P, K)	2 D
TR10	0305732, 3 or 0305952, 3	2SC711 (F, G) or 2SC711 (F, G)	2 D
TR11	0300510, 1	2SA733 (P, Q)	2 D
TR12	0300221	2SA562 (Y)	2 D
TR13	0306141, 2	2SC1362 ⑤ (7, 8)	1 E
TR14	0306141, 2	2SC1362 ⑤ (7, 8)	2 E
TR15	0306131, 2 or 0305951, 2	2SC1364 (6, 7) or 2SC945 (Q, P)	2 E
TR16	0306131, 2 or 0305951, 2	2SC1364 (6, 7) or 2SC945 (Q, P)	2 E
TR17	0305991	2SC403C (3)	2 B
TR18	0305992	2SC403C (4)	2 B
TR19	0305992	2SC403C (4)	2 C
TR20	0305992	2SC403C (4)	2 C
TR21	0305991	2SC403C (3)	2 C
TR22	0305732, 3	2SC711 (F, G)	
IC01	0360120	μPC555H IC	1 C
IC02	0360120	μPC555H IC	1 D
IC03	0360250	μPC554C IC	1, 2 E
FET01	0370080, 1	3SK39 (Q, R) FET	1 A
D01	0311060	1N60P Diode	1 D, E
D02	0311060	1N60P Diode	1 D, E
D03	0310330, 1	1N60 Diode	1 D
D04	0340090	DS-430 Diode	2 D
D05	0311050	1S953 Diode	2 D
D06	0310330, 1	1N60 Diode	2 B
D07	0311090	1S1007-J Diode	1, 2 C
D08	0310330, 1	1N60 Diode	2 C
D09	0310333, 1	1N60 Diode	2 C
T01	4235930	FM IF Coil	1 A, B
T02	4235860	FM IF Coil	1 C, D
T03	4235750	FM IF Coil	1 D
T04	4235760	FM IF Coil	1 D
T05	4235940	FM IF Coil	1, 2 D
T06	4220630	AM OSC Coil	2 B
T07	0910280	Ceramic Filter	1, 2 B
T08	4230580	AM IF Coil	1, 2 C
T09	4230610	AM IF Coil	1, 2 C
L01	4200560	FM ANT Coil	1 A
L02	4210300	FM RF Coil	1 A

Conductor Side

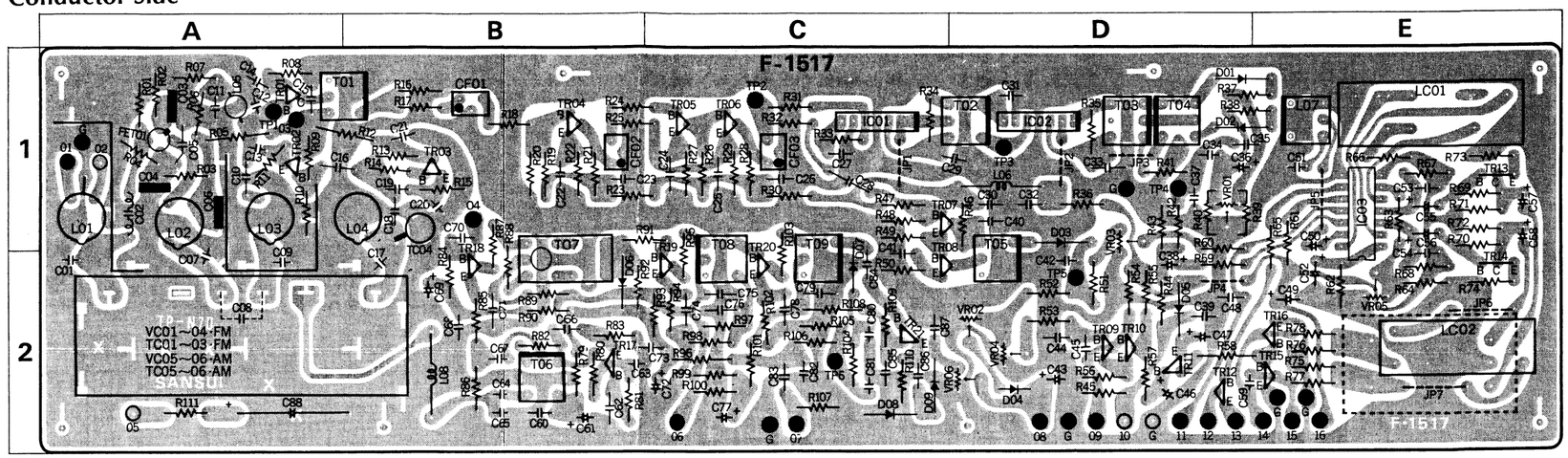

Parts No.	Stock No.	Description	Position
L03	4210300	FM RF Coil	1 A
L04	4220530	FM OSC Coil	1 A, B
L05	4290110	Peaking Coil	1 A
L06	4290011	Peaking Coil	1 D
L07	4240720	19kHz Coil	1 E
L08	4290011	Peaking Coil	2 B
LC01	4240710	MPX Coil	1 E
LC02	0910220	Low Pass Filter	2 E
CF01	0910150	Ceramic Filter	1 B
CF02	0910150	Ceramic Filter	1 B
CF03	0910150	Ceramic Filter	1 C
VC01~06	1220130	Variable Capacitor	2 A
TC04	1230090	Ceramic Trimmer	1 B
C01	0669368	68pF	2 A
C02	0657102	0.001μF	1 A
C03	0659015	2200pF	1 A
C04	0659015	2200pF 50V C.C.	1 A
C05	0657223	0.022μF	
C06	0659015	2200pF	1 A
C07	0669370	10pF	1, 2 A
C08	0679023	0.39pF 50V Gimmick Capacitor	2 A
C09	0669370	10pF	2 A
C10	0661120	12pF	1 A
C11	0660221	220pF	1 A
C12	0661100	10pF	1 A
C13	0661100	10pF 50V C.C.	1 A
C14	0657223	0.022μF	1 A
C15	0657223	0.022μF	1 A
C16	0669020	4.7pF	1 A, B

Parts No.	Stock No.	Description	Position
C17	0669382	12pF	2 B
C18	0669370	10pF	1 B
C19	0669369	8.2pF	1 B
C20	0669375	15pF	1 B
C21	0657223	0.022μF	1 B
C22	0657223	0.022μF	1 B
C23	0657223	0.022μF	1 B
C24	0657473	0.047μF	1 C
C25	0657473	0.047μF	1 C
C26	0657223	0.022μF 50V C.C.	1 C
C27	0657223	0.022μF	1 C
C28	0657101	100pF	1 C
C29	0657223	0.022μF	1 C, D
C30	0657223	0.022μF	1 D
C31	0657223	0.022μF	1 D
C32	0657223	0.022μF	1 D
C33	0657473	0.047μF	1 D
C34	0657101	100pF	1 D
C35	0657101	100pF	1 D, E
C36	0512100	10μF 16V E.C.	1 D
C37	0657101	100pF 50V C.C.	1 D
C38	0513479	4.7μF 25V E.C.	2 D
C39	0657223	0.022μF 50V C.C.	
C40	0657223	0.022μF	1 D
C41	0657223	0.022μF 50V C.C.	2 C
C42	0657102	0.001μF	2 D
C43	0510101	100μF 6.3V E.C.	2 D
C44	0601687	0.068μF 50V M.C.	2 D
C45	0657223	0.022μF 50V C.C.	2 D
C46	0519104	0.1μF	2 D
C47	0515339	3.3μF 50V E.C.	2 D
C48	0601687	0.068μF 50V M.C.	2 D
C49	0512101	100μF 16V E.C.	
C50	0515339	3.3μF 50V E.C.	1, 2 E
C51	0629001	6800pF 50V P.C.	1 E

Parts No.	Stock No.	Description	Position
C52	0512100	10μF 16V E.C.	2 E
C53	0600127	0.012μF 50V M.C.	1 E
C54	0600127	0.012μF	2 E
C55	0515109	1μF	1 E
C56	0515109	1μF 50V E.C.	1 E
C57	0519105	2.2μF	1 E
C58	0519105	2.2μF	1 E
C59	0620102	100pF 50V P.C.	1 D, E
C60	0657223	0.022μF 50V C.C.	2 B
C61	0512470	47μF 16V E.C.	2 B
C62	0657473	0.047μF 50V C.C.	2 B
C63	0657330	33pF	2 B, C
C64	0620361	360pF 50V P.C.	2 B
C65	0669437	6.8pF 50V C.C.	2 B
C66	0601107	0.01μF 50V M.C.	2 B
C67	0601107	0.01μF	2 B
C68	0657223	0.022μF 50V C.C.	2 B
C69	0515339	3.3μF 50V E.C.	2 B
C70	0657223	0.022μF	1 B
C71	0657473	0.047μF 50V C.C.	2 B
C72	0512100	10μF 50V E.C.	2 C
C73	0657223	0.022μF 50V C.C.	2 B, C
C74	0657473	0.047μF	2 C
C75	0657473	0.047μF 50V C.C.	2 C
C76	0657473	0.047μF	2 C
C77	0512470	47μF 16V E.C.	2 C
C78	0601108	0.1μF 50V M.C.	2 C
C79	0657473	0.047μF 50V C.C.	2 C
C80	0601476	0.0047μF	2 C
C81	0601227	0.022μF 50V M.C.	2 C
C82	0601107	0.01μF	2 C
C83	0601477	0.047μF	2 C
C84	0657101	100pF	2 C
C85	0657223	0.022μF 50V C.C.	2 C
C86	0657223	0.022μF	2 C

Parts No.	Stock No.	Description			Position
C87	0657223	0.022μF	50V	C.C.	2C
C88	0502100	10μF	16V	E.C.	
R01	0113104	100kΩ	¼W	S.R.	1A
R02	0113101	100Ω	¼W	S.R.	1A
	0113181	180Ω	¼W	S.R.	
R03	0113224	220kΩ	¼W	S.R.	1A
R04	0113104	100kΩ	¼W	S.R.	1A
R05	0107220	22Ω	¼W	C.R.	1A
R06	0113123	12kΩ	¼W	S.R.	1A
R07	0113222	2.2kΩ	¼W	S.R.	1A
R08	0113102	1kΩ	¼W	S.R.	1A
R09	0113223	22kΩ	¼W	S.R.	1A
R10	0113223	22kΩ	¼W	S.R.	1A
R11	0113821	820Ω	¼W	S.R.	1A
R12	0107822	8.2kΩ	¼W	C.R.	1A, B
R13	0113104	100kΩ	¼W	S.R.	1B
R14	0113220	22Ω	¼W	S.R.	1B
R15	0113222	2.2kΩ	¼W	S.R.	1B
R16	0113181	180Ω	¼W	S.R.	1B
R17	0113101	100Ω	¼W	S.R.	1B
R18	0113221	220Ω	¼W	S.R.	1B
R19	0113122	1.2kΩ	¼W	S.R.	1B
R20	0113562	5.6kΩ	¼W	S.R.	1B
R21	0113471	470Ω	¼W	S.R.	1B
R22	0113272	2.7kΩ	¼W	S.R.	1B
R23	0113100	10Ω	¼W	S.R.	1B, C
R24	0113221	220Ω	¼W	S.R.	1B, C
R25	0113102	1kΩ	¼W	S.R.	1B, C
R26	0113821	820Ω	¼W	S.R.	1C
R27	0113332	3.3kΩ	¼W	S.R.	1C
R28	0113471	470Ω	¼W	S.R.	1C
R29	0113272	2.7kΩ	¼W	S.R.	1C
R30	0113100	10Ω	¼W	S.R.	1C
R31	0113220	22Ω	¼W	S.R.	1C
R32	0113682	6.8kΩ	¼W	S.R.	1C
R33	0113331	330Ω	¼W	S.R.	1C
R34	0113103	10kΩ	¼W	S.R.	1C
R35	0113682	6.8kΩ	¼W	S.R.	2D
R36	0113100	10Ω	¼W	S.R.	1D
R37	0113102	1kΩ	¼W	S.R.	1D, E
R38	0113102	1kΩ	¼W	S.R.	1D, E
R41	0113150	15Ω	¼W	S.R.	1D
R42	0113102	1kΩ	¼W	S.R.	1D
R43	0113153	15kΩ	¼W	S.R.	1D
R44	0113153	15kΩ	¼W	S.R.	
R45	0113272	2.7kΩ	¼W	S.R.	
R46	0113101	100Ω	¼W	S.R.	1D
R47	0113223	22kΩ	¼W	S.R.	1C
R48	0113682	6.8kΩ	¼W	S.R.	1C
R49	0113182	1.8kΩ	¼W	S.R.	1C
R50	0113471	470Ω	¼W	S.R.	2C
R51	0113103	10kΩ	¼W	S.R.	2D
R52	0113122	1.2kΩ	¼W	S.R.	2D
R53	0113104	100kΩ	¼W	S.R.	2D
R54	0113393	39kΩ	¼W	S.R.	2D
R55	0113153	15kΩ	¼W	S.R.	2D
R56	0113560	56Ω	¼W	S.R.	2D
R57	0113473	4.7kΩ	¼W	S.R.	2D
R58	0107332	3.3kΩ	¼W	C.R.	2D, E
R59	0103150	15Ω	¼W	S.R.	2D
R60	0113150	100kΩ	¼W	S.R.	1, 2D
R61	0113334	330kΩ	¼W	S.R.	1, 2E
R62	0113472	4.7kΩ	¼W	S.R.	2E
R65	0113562	5.6kΩ	¼W	S.R.	1, 2E

Parts No.	Stock No.	Description			Position
R67	0113392	3.9kΩ	¼W	S.R.	1E
R68	0113392	3.9kΩ	¼W	S.R.	2E
R69	0113684	680kΩ	¼W	S.R.	1E
R70	0113684	680kΩ	¼W	S.R.	1E
R71	0113392	3.9kΩ	¼W	S.R.	1E
R72	0113392	3.9kΩ	¼W	S.R.	1E
R73	0113331	330Ω	¼W	S.R.	1E
R74	0113331	330Ω	¼W	S.R.	2E
R75	0113332	3.3kΩ	¼W	S.R.	2E
R76	0113332	3.3kΩ	¼W	S.R.	2E
R77	0113562	5.6kΩ	¼W	S.R.	2E
R78	0113562	5.6kΩ	¼W	S.R.	2E
R79	0113272	2.7kΩ	¼W	S.R.	2B
R80	0113101	100Ω	¼W	S.R.	2B
R81	0113564	560kΩ	¼W	S.R.	2B
R82	0113100	10Ω	¼W	S.R.	2B
R83	0113102	1kΩ	¼W	S.R.	2B
R84	0113103	10kΩ	¼W	S.R.	2B
R85	0113220	22Ω	¼W	S.R.	2B
R86	0113102	1kΩ	¼W	S.R.	2B
R87	0113561	560Ω	¼W	S.R.	1, 2B
R88	0113224	220kΩ	¼W	S.R.	1, 2.B
R89	0113561	560kΩ	¼W	S.R.	2B
R90	0113392	3.9kΩ	¼W	S.R.	2B
R91	0113332	3.3kΩ	¼W	S.R.	1B, C
R92	0113123	12kΩ	¼W	S.R.	2B
R93	0113124	120kΩ	¼W	S.R.	2C
R94	0113102	1kΩ	¼W	S.R.	2C
R95	0113681	860Ω	¼W	S.R.	1, 2C
R96	0107153	15kΩ	¼W	C.R.	2C
R97	0113822	8.2kΩ	¼W	S.R.	2C
R98	0113562	5.6kΩ	¼W	S.R.	2C
R99	0113470	47Ω	¼W	S.R.	2C
R100	0113470	47Ω	¼W	S.R.	2C
R101	0113101	100Ω	¼W	S.R.	2C
R102	0113102	1kΩ	¼W	S.R.	2C
R103	0113471	470Ω	¼W	S.R.	1, 2C
R104	0113102	1kΩ	¼W	S.R.	2C
R105	0113472	4.7kΩ	¼W	S.R.	2C
R106	0113392	3.9kΩ	¼W	S.R.	2C
R107	0113473	47kΩ	¼W	S.R.	2C
R108	0107122	1.2kΩ	¼W	C.R.	2C
R109	0113823	82kΩ	¼W	S.R.	2C
R110	0113122	1.2kΩ	¼W	S.R.	2C
R111	0113100	10Ω			
R112	0107822	8.2kΩ			
R901	0107102	1kΩ			
R902	0107104	100kΩ			
VR02	1035170	47kΩ (B)	Semi Variable Resistor (Solid Type)		2D
VR04	1035190	47kΩ (B)	Semi Variable Resistor (Solid Type)		2D
VR05	1035170	47kΩ (B)	Semi Variable Resistor (Solid Type)		2D
	2260010	Testpin			

4-2. F-1515 Protector & Power Circuit Board

Conductor Side

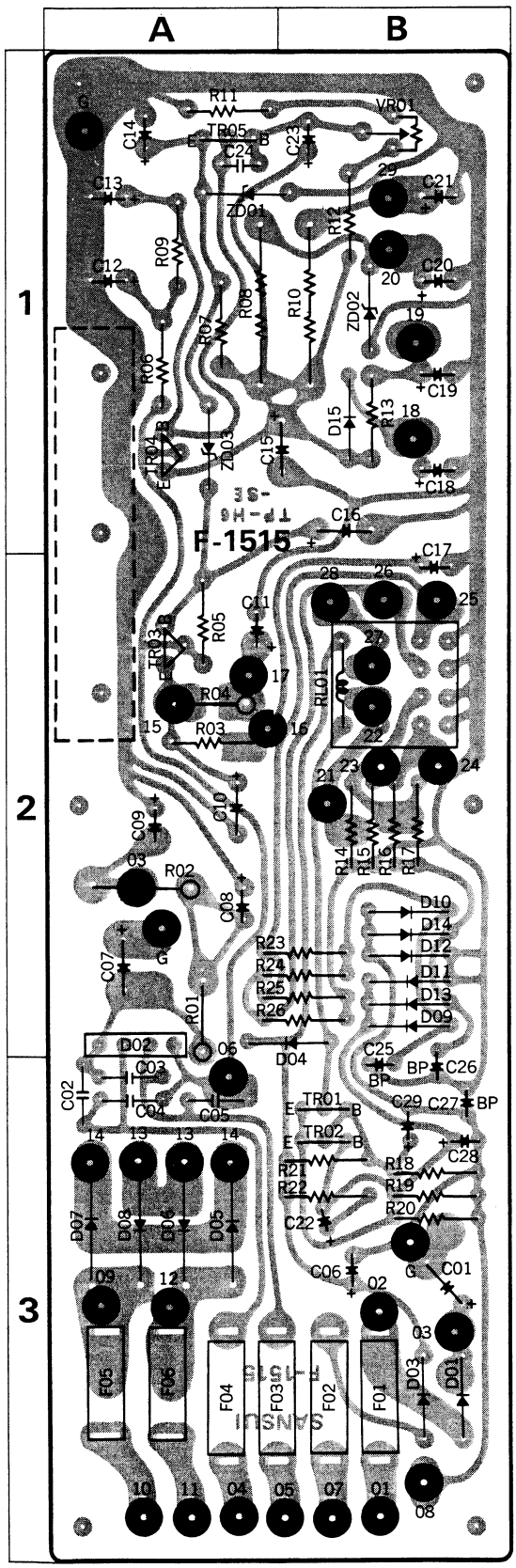

(Stock No. 7501330 Complete Circuit Board. . . . QRX-7500A)

Parts List

Parts No.	Stock No.	Description			Position
TR01	0306132, 3	2SC1364 (7, 8)		Transistor	3 B
TR02	0306132, 3	2SC1364 (7, 8)			3 B
TR03	0308331, 2	2SD315 (E, D)			2 A
TR04	0308331, 2	2SD315 (E, D)			1 A
TR05	0306020, 1	2SC983 (O, R)			1 A
D01	0310340	10D-1		Diode	3 B
D02	0311070	2B2DM			2 A
D03	0310340	10D-1			3 B
D04	0310340	10D-1			2 A, B
D05	0311240	SR3-AM-4			3 A
D06	0311240	SR3-AM-4			3 A
D07	0311240	SR3-AM-4			3 A
D08	0311240	SR3-AM-4			3 A
D09	0310400	1N-34A			2 B
D10	0310400	1N-34A			2 B
D11	0310400	1N-34A			2 B
D12	0310400	1N-34A			2 B
D13	0310400	1N-34A			2 B
D14	0310400	1N-34A			2 B
D15	0310340	10D-1			1 B
ZD01	0316300	RD-12E (C)		Zener Diode	1 A
ZD02	0316300	RD-12E (C)			1 B
ZD03	0315370 or 0315650	RD-19 A (L) or EQB01-18			1 A
C01	0511102	1000μF	10V	E.C.	3 B
C06	0515330	33μF	50V	E.C.	3 B
C07	0519903	100μF	80V	E.C.	2 A
C08	0515101	100μF	50V	E.C.	2 A
C09	0515330	33μF	50V	E.C.	2 A
C10	0514331	330μF	35V	E.C.	2 A
C11	0515101	100μF	50V	E.C.	2 A
C12	0515330	33μF			1 A
C13	0515101	100μF	50V	E.C.	1 A
C14	0512101	100μF	16V	E.C.	1 A
C15	0515101	100μF	50V	E.C.	1 A
C16	0514331	330μF	35V	E.C.	1 B
C17	0515101	100μF	50V	E.C.	2 B
C18	0515101	100μF			1 B
C19	0515101	100μF			1 B
C20	0512101	100μF	16V	E.C.	1 B
C21	0512101	100μF			1 B
C22	0519103	0.47μF	50V	E.C.	3 B
C23	0515100	10μF			1 B
C25	0530470	47μF	6.3V	BP. E.C.	3 B
C26	0530470	47μF			2, 3 B
C27	0535109	1μF	50V	BP. E.C.	3 B
C28	0515109	1μF	50V	E.C.	3 B
C29	0510471	470μF	6.3V	E.C.	3 B
C30	0660221	220 pF	50V	C.C.	
C31	0655103	0.01μF	500V	C.C.	
R01	0103271	270Ω	½W	C.R.	2 A
R02	0103271	270Ω			2 A
R03	0103470	47Ω			2 A
R04	0104820	82Ω	1 W	C.R.	2 A
R05	0107392	3.9kΩ	¼W	C.R.	2 A
R06	0107152	1.5kΩ			1 A
R07	0107562	5.6kΩ			1 A

Parts No.	Stock No.	Description	Position
R08	0162561	560Ω 2 W Ce.R.	1 A
R09	0107152	1.5kΩ ¼W C.R.	1 A
R10	0162181	180Ω 2 W Ce.R.	1 B
R11	0107682	6.8kΩ ¼W C.R.	1 A
R12	0107682	6.8kΩ ¼W C.R.	1 B
R13	0103220	22Ω ½W C.R	1 B
R14	0107332	3.3kΩ ¼W C.R.	2 B
R15	0107332	3.3kΩ ¼W C.R.	2 B
R16	0107473	47kΩ ¼W C.R.	2 B
R17	0107473	47kΩ ¼W C.R.	2 B
R18	0107562	5.6kΩ ¼W C.R.	3 B
R19	0107474	470kΩ ¼W C.R.	3 B
R20	0107479	4.7Ω ¼W C.R.	3 B
R21	0107823	82kΩ ¼W C.R.	3 A, B

Parts No.	Stock No.	Description	Position
R22	0107394	390kΩ ¼W C.R.	2 A, B
R23	0107473	47kΩ ¼W C.R.	2 A, B
R24	0107473	47kΩ ¼W C.R.	2 A, B
R25	0107332	3.3kΩ ¼W C.R.	2 A, B
R26	0107332	3.3kΩ ¼W C.R.	2 A, B
VR01	1035090	2.2kΩ (B) Semi-Variable Resistor (Solid Type)	1 B
RL01	1150101	MY4-O2-US-SA Relay	2 B
F01	0432900, 1	5 A Fuse	3 B
F02	0432830, 1	1 A Fuse	3 B
F03	0432850, 1	2 A Fuse	3 A
F04	0432850, 1	2 A Fuse	3 A

4-3. F-1488 Connector Joint Circuit Board

(Stock No. 7593220 Complete Circuit Board.... QRX-5500A)
(Stock No. 7593320 Complete Circuit Board.... QRX-7500A)

Conductor Side

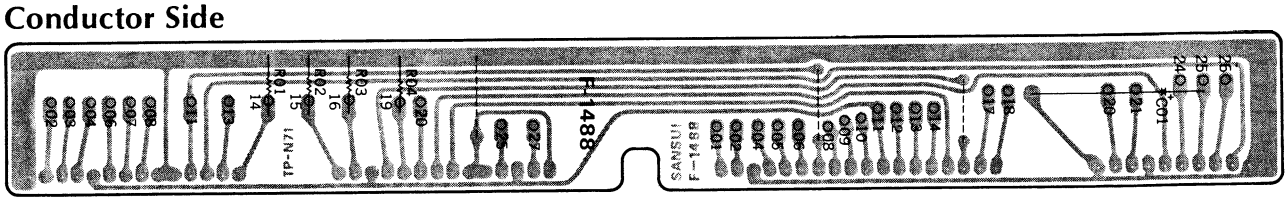

Parts List

Parts No.	Stock No.	Description	Position
C01	0504221	220μF 35V E.C.	1
R01	0107474	470kΩ ± 5% ¼W C.R.	2
R02	0107474	470kΩ ± 5% ¼W C.R.	2
R03	0107474	470kΩ ± 5% ¼W C.R.	2
R04	0107474	470kΩ ± 5% ¼W C.R.	2

Parts No.	Stock No.	Description	Position
	2420150	10P Connector	
	2420160	14P Connector	
	2420170	18P Connector	

4-4. F-1470 Illumination Unit Circuit Board

(Stock No. 7593230 Complete Circuit Board.... QRX-5500A)
(Stock No. 7593330 Complete Circuit Board ... QRX-7500A)

Conductor Side

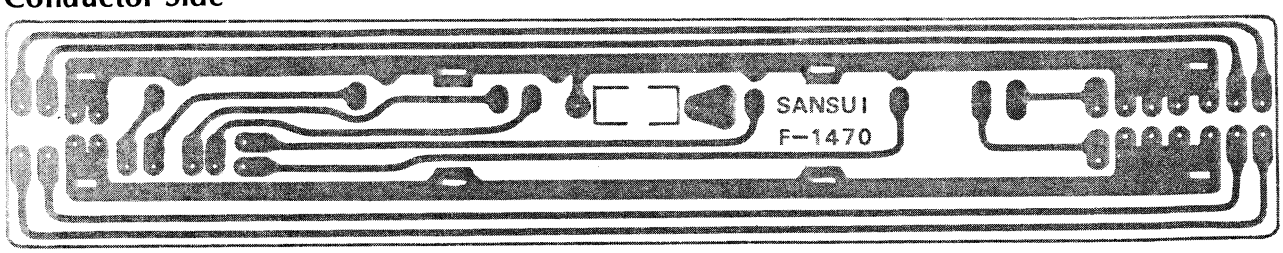

Parts List

Parts No.	Stock No.	Description
R01	0107180	18Ω ¼W C.R.

4-5. F-1485 Meter Circuit Board (Stock No. 7593200 Complete Circuit Board....QRX-5500A) (Stock No. 7593290 Complete Circuit Board....QRX-7500A)

Conductor Side

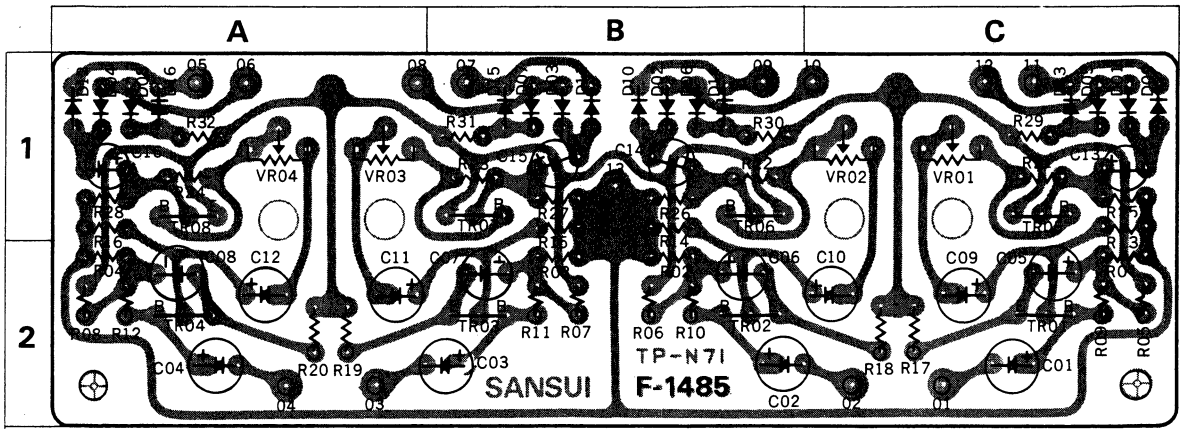

Parts List

Parts No.	Stock No.	Description	Position
TR01~04	0306012 or 0306071	2SC1222 (F) or 2SC1222 (G) Transistor	1 A, B, C
TR05~08	0306012 or 0306071	2SC1222 (F) or 2SC1222 (G) Transistor	1 A, B, C
D01	0310400	1N34A Diode	1 C
D02	0310400	1N34A Diode	1 B
D03	0310400	1N34A Diode	1 B
D04	0310400	1N34A Diode	1 A
D05	0310400	1N34A Diode	1 C
D06	0310400	1N34A Diode	1 B
D07	0310400	1N34A Diode	1 B
D08	0310400	1N34A Diode	1 A
D09	0310400	1N34A Diode	1 C
D10	0310400	1N34A Diode	1 B
D11	0310400	1N34A Diode	1 B
D12	0310400	1N34A Diode	1 A
D13	0310400	1N34A Diode	1 C
D14	0310400	1N34A Diode	1 B
D15	0310400	1N34A Diode	1 B
D16	0310400	1N34A Diode	1 A
C01	0515109	1μF 50V E.C.	2 C
C02	0515109	1μF 50V E.C.	2 B
C03	0515109	1μF 50V E.C.	2 B
C04	0515109	1μF 50V E.C.	2 A
C05	0515109	1μF 50V E.C.	2 C
C06	0515109	1μF 50V E.C.	2 B
C07	0515109	1μF 50V E.C.	2 B
C08	0515109	1μF 50V E.C.	2 A
C09	0515109	1μF 50V E.C.	2 C
C10	0515109	1μF 50V E.C.	2 C
C11	0515109	1μF 50V E.C.	2 A
C12	0515109	1μF 50V E.C.	2 A
C13	0519103	0.47μF 50V E.C.	1 C
C14	0519103	0.47μF 50V E.C.	1 B
C15	0519103	0.47μF 50V E.C.	1 B
C16	0519103	0.47μF 50V E.C.	1 A

Parts No.	Stock No.	Description	Position
R01	0106824	820kΩ ±5% ¼W C.R. (E.L.R.)	2 C
R02	0106824	820kΩ ±5% ¼W C.R. (E.L.R.)	2 B
R03	0106824	820kΩ ±5% ¼W C.R. (E.L.R.)	2 B
R04	0106824	820kΩ ±5% ¼W C.R. (E.L.R.)	2 A
R05	0106104	100kΩ ±5% ¼W C.R. (E.L.R.)	2 C
R06	0106104	100kΩ ±5% ¼W C.R. (E.L.R.)	2 B
R07	0106104	100kΩ ±5% ¼W C.R. (E.L.R.)	2 B
R08	0106104	100kΩ ±5% ¼W C.R. (E.L.R.)	2 A
R09	0106474	470kΩ ±5% ¼W C.R. (E.L.R.)	2 C
R10	0106474	470kΩ ±5% ¼W C.R. (E.L.R.)	2 B
R11	0106474	470kΩ ±5% ¼W C.R. (E.L.R.)	2 B
R12	0106474	470kΩ ±5% ¼W C.R. (E.L.R.)	2 A
R13	0106104	100kΩ ±5% ¼W C.R. (E.L.R.)	1 C
R14	0106104	100kΩ ±5% ¼W C.R. (E.L.R.)	1 B
R15	0106104	100kΩ ±5% ¼W C.R. (E.L.R.)	1 B
R16	0106104	100kΩ ±5% ¼W C.R. (E.L.R.)	1 A
R17	0106103	10kΩ ±5% ¼W C.R. (E.L.R.)	2 C
R18	0106103	10kΩ ±5% ¼W C.R. (E.L.R.)	2 C
R19	0106103	10kΩ ±5% ¼W C.R. (E.L.R.)	2 A
R20	0106103	10kΩ ±5% ¼W C.R. (E.L.R.)	2 A
R21	0106105	1MΩ ±5% ¼W C.R. (E.L.R.)	1 C
R22	0106105	1MΩ ±5% ¼W C.R. (E.L.R.)	1 B
R23	0106105	1MΩ ±5% ¼W C.R. (E.L.R.)	1 B
R24	0106105	1MΩ ±5% ¼W C.R. (E.L.R.)	1 A
R25	0106472	4.7kΩ ±5% ¼W C.R. (E.L.R.)	1 C
R26	0106472	4.7kΩ ±5% ¼W C.R. (E.L.R.)	1 B
R27	0106472	4.7kΩ ±5% ¼W C.R. (E.L.R.)	1 B
R28	0106472	4.7kΩ ±5% ¼W C.R. (E.L.R.)	1 A
R29	0106822	8.2kΩ ±5% ¼W C.R. (E.L.R.)	1 C
R30	0106822	8.2kΩ ±5% ¼W C.R. (E.L.R.)	1 B
R31	0106822	8.2kΩ ±5% ¼W C.R. (E.L.R.)	1 B
R32	0106822	8.2kΩ ±5% ¼W C.R. (E.L.R.)	1 A
VR01	1032151	200kΩ (B) Semi-Variable Resistor	1 C
VR02	1032151	200kΩ (B) Semi-Variable Resistor	1 C
VR03	1032151	200kΩ (B) Semi-Variable Resistor	1 A
VR04	1032151	200kΩ (B) Semi-Variable Resistor	1 A

4-6. F-1483 Protector & Power Circuit Board (Stock No. 7501320 Complete Circuit Board....QRX-5500A)

Conductor Side

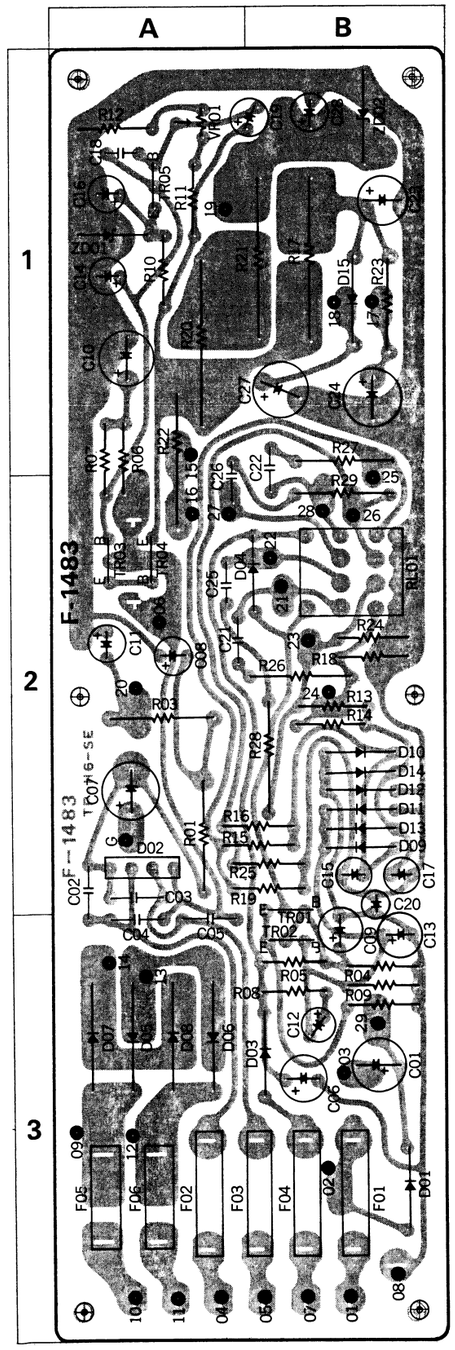

Parts List

Parts No.	Stock No.	Description				Position
TR01	0306131, 2	2SC1364 (6, 7)			Transistor	2, 3 B
TR02	0306131, 2	2SC1364 (6, 7)				3 B
TR03	0305930, 1	2SC1211 (C, D)				2 A
TR04	0308392, 3	2SD313 (E, F)				2 A
TR05	0306070, 1 or 0306132, 3	2SC1313® (F, G) or 2SC1364 (7, 8)				1 A
D01	0310340	10D-1			Diode	3 B
D02	0311070	2B2DM				2 A
D03	0310340	10D-1				3 B
D04	0310340	10D-1				2 B
D05	0311240	SR3-AM-4				3 A
D06	0311240	SR3-AM-4				3 A
D07	0311240	SR3-AM-4				3 A
D08	0311240	SR3-AM-4				3 A
D09	0310400	1N34A				2 B
D10	0310400	1N34A				2 B
D11	0310400	1N34A				2 B
D12	0310400	1N34A				2 B
D13	0310400	1N34A				2 B
D14	0310400	1N34A				2 B
ZD01	0316300	RD-12E (C)			Zener Diode	1 A
ZD02	0315090	ZB-1-13				1 B
RL01	1150101	MY4-0-US-SA			Relay	2 B
C01	0511471	470μF	10V	E.C.		3 B
C02	0655103	0.01μF	500V	C.C.		2, 3 A
C03	0655103	0.01μF				2 A
C04	0655103	0.01μF				3 A
C05	0655103	0.01μF				3 A
C06	0515330	33μF	50V	E.C.		3 B
C07	0519302	220μF	80V	E.C.		2 A
C08	0515101	100μF	50V	E.C.		2 A
C09	0510471	470μF	6.3V	E.C.		2, 3 B
C10	0519301	100μF	80V	E.C.		1 A
C11	0515470	47μF	50V	E.C.		2 A
C12	0519103	0.47μF				3 B
C13	0515109	1μF				3 B
C14	0657223	0.02μF				1 A
C15	0530470	47μF	6.3V	E.C.		2 B
C16	0512470	47μF	16V	E.C.		1 A
C17	0530470	47μF	6.3V	E.C.		2 B
C19	0515100	10μF	50V	E.C.		1 A, B
C20	0535109	1μF				2, 3 B
C23	0513221	220μF				1 B
C24	0513221	220μF	25V	E.C.		1 B
C27	0513331	330μF				1 B
C28	0512221	220μF	16V	E.C.		1 B
C30	0605477	0.047μF	250V	M.C.		
R01	0182681	680Ω	±5%	2W	Ce.R.	2 A
R02	0107479	4.7Ω	±5%	¼W	C.R.	
R04	0107562	5.6kΩ	±5%	¼W	C.R.	3 B
R05	0107823	82kΩ				3 B
R06	0107562	5.6kΩ				1, 2 A
R07	0107332	3.3kΩ				1, 2 A
R08	0107394	390kΩ				3 B
R09	0107474	470kΩ				3 B
R10	0107562	5.6kΩ	±5%	¼W	C.R.	1 A
R11	0107223	22kΩ				1 A
R12	0107822	8.2kΩ				1 A
R13	0107473	47kΩ				2 B
R14	0107473	47kΩ				2 B
R15	0107473	47kΩ				2 A, B
R16	0107473	47kΩ				2 A, B
R17	0182231	300Ω	±10%	2W	Ce.R.	1 B
R18	0107332	3.3kΩ	±5%	¼W	C.R.	2 B
R19	0107332	3.3kΩ				2 A, B
R22	0132101	100Ω	±10%	2W	Ce.R.	1, 2 A
R23	0104220	22Ω	±5%	1W	C.R.	1 B
R24	0107332	3.3kΩ	±5%	¼W	C.R.	2 B
R25	0107332	3.3kΩ	±5%	¼W	C.R.	2 A, B
R901	0107102	1kΩ	±5%	¼W	C.R.	
VR01	1035100	3.3kΩ (B)	Solid Volume			1 A
F01	0432900, 1	5A Wired-in Fuse				3 B
F02	0432850, 1	2A Wired-in Fuse				3 A
F03	0432850, 1	2A Wired-in Fuse				3 B
F04	0432830, 1	1A Wired-in Fuse				3 B

4-7. F-1516 Accessory Circuit Board

(Stock No. 7593340 Copmlete Circuit Board....QRX-7500A)

Conductor Side

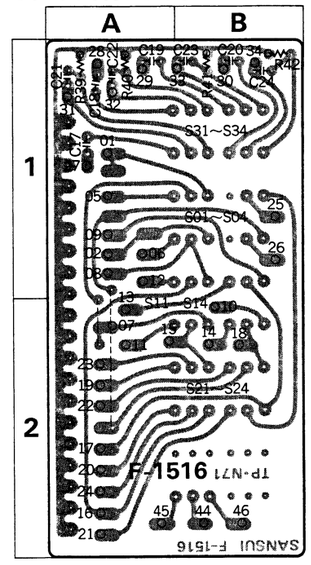

Parts List

Parts No.	Stock No.	Description				Position
C17, 18	0620151	150pF	50V	P.C.		1 A. 1 A
C19, 20	0620151	150pF				1 A. 1 B
C21, 22	0600227	0.022μF	50V	M.C.		1 A. 1 A
C23, 24	0600227	0.022μF				1 B. 1 B
R39, 40	0106333	33kΩ	¼W	C.R. (E.L.R)		1 A. 1 A
R41, 42	0106333	33kΩ				1 B. 1 B
S31~34	1130750	SPM055D	Push Switch			1 B

4-8. F-1487 Volume Circuit Board

(Stock No. 7593270 Complete Circuit Board....QRX-5500A)
(Stock No. 7593310 Complete Circuit Board....QRX-7500A)

Conductor Side

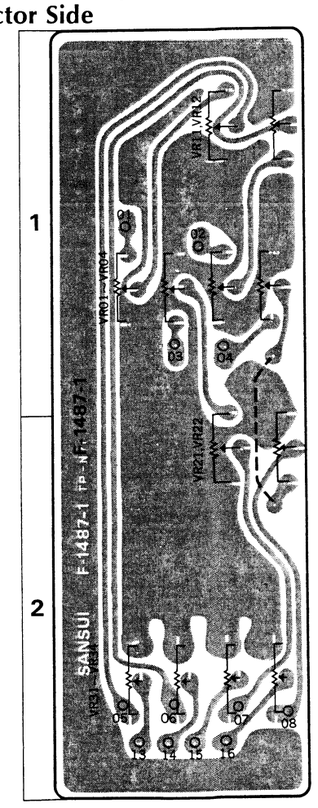

Parts List

Parts No.	Stock No.	Description		Position
VR01~04	1060250, 1	250kΩ (HB) × 4	Variable Resistor	1
VR11, 12	1010400, 1	250kΩ (HB)		1
VR21, 22	1010400, 1	250kΩ (HB)		1, 2
VR31~34	1060240, 1	250kΩ (B) × 4		2

4-9. F-1484 Tone Control Circuit Board

(Stock No. 7561200 Complete Circuit Board....QRX-5500A)
(Stock No. 7561210 Complete Circuit Board....QRX-7500A)

Conductor Side

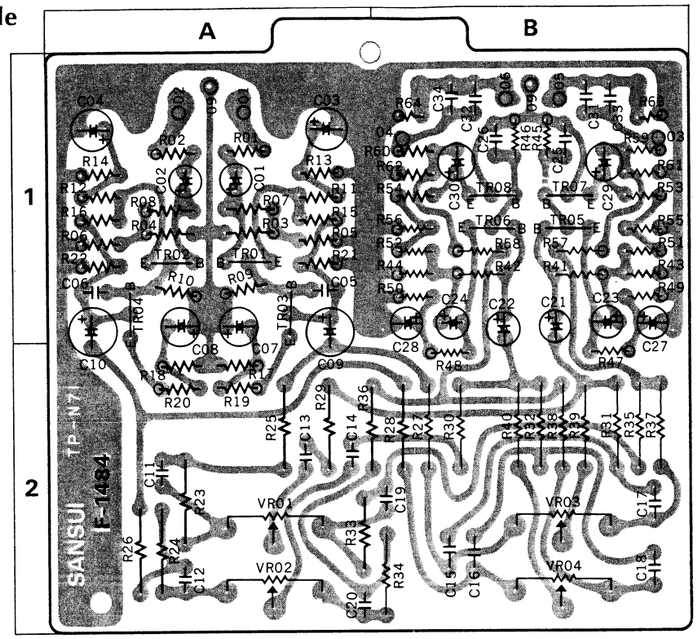

Parts List

Parts No.	Stock No.	Description	Position
TR01	0305880, 1 or 0306071, 2	2SC1000 (GR, BL) or 2SC1313 Ⓡ (G, H)	1 A
TR02	0305880, 1 or 0336071, 2	2SC1000 (GR, BL) or 2SC1313 Ⓡ (G, H)	1 A
TR03	0300450 or 0300470, 1	2SA493 (GR) or 2SA726 Ⓦ (F, G)	1 A
TR04	0300450 or 0300470, 1	2SA493 (GR) or 2SA726 Ⓦ (F, G)	1 A
TR05	0305880 or 0306071, 2	2SC1000 (GR, BL) or 2SC1313 Ⓡ (G, H)	1 B
TR06	0305880 or 0306071, 2	2SC1000 (GR, BL) or 2SC1313 Ⓡ (G, H)	1 B
TR07	0305880 or 0306071, 2	2SC1000 (GR, BL) or 2SC1313 Ⓡ (G, H)	1 B
TR08	0305880 or 0306071, 2	2SC1000 (GR, BL) or 2SC1313 Ⓡ (G, H)	1 B
C01	0573109	1μF 25V T.C.	1 A
C02	0573109	1μF 25V T.C.	1 A
C03	0512470	47μF 16V E.C.	1 A
C04	0512470	47μF 16V E.C.	1 A
C05	0660470	47pF 50V E.C.	1 A
C06	0660470	47pF 50V C.C.	1 A
C07	0512330	33μF 16V E.C.	1 A
C08	0512330	33μF 16V E.C.	1 A
C09	0519102	3.3μF 50V E.C.	1, 2 A
C10	0519102	3.3μF 50V E.C.	1, 2 A
C11	0600476	0.0047μF ±5% 50V M.C.	2 A
C12	0600476	0.0047μF ±5% 50V M.C.	2 A
C13	0600826	0.0082μF ±5% 50V M.C.	2 A
C14	0600826	0.0082μF ±5% 50V M.C.	2 A
C15	0600227	0.022μF ±5% 50V M.C.	2 B
C16	0600227	0.022μF ±5% 50V M.C.	2 B
C17	0600227	0.022μF ±5% 50V M.C.	2 B
C18	0600227	0.022μF ±5% 50V M.C.	2 B
C19	0600476	0.0047μF ±5% 50V M.C.	2 B
C20	0600476	0.0047μF ±5% 50V M.C.	2 A
C21	0519101	1μF 50V E.C.	1, 2 B
C22	0519101	1μF 50V E.C.	1, 2 B
C23	0512100	10μF 16V E.C.	1 B
C24	0512100	10μF 16V E.C.	1 B
C25	0660470	47pF 50V C.C.	1 B
C26	0660470	47pF 50V C.C.	1 B
C27	0512100	10μF 16V E.C.	1 B
C28	0512100	10μF 16V E.C.	1 B
C29	0519101	1μF 50V E.C.	1 B
C30	0519101	1μF 50V E.C.	1 B
C33	0600227	0.022μF 50V M.C.	1 B
C34	0600227	0.022μF 50V M.C.	1 B
R01	0106102	1kΩ ±5% ¼W C.R. (E.L.R.)	1 A
R02	0106102	1kΩ ±5% ¼W C.R. (E.L.R.)	1 A
R03	0106474	470kΩ ±5% ¼W C.R. (E.L.R.)	1 A
R04	0106474	470kΩ ±5% ¼W C.R. (E.L.R.)	1 A
R05	0106274	270kΩ ±5% ¼W C.R. (E.L.R.)	1 A
R06	0106274	270kΩ ±5% ¼W C.R. (E.L.R.)	1 A
R07	0106394	390kΩ ±5% ¼W C.R. (E.L.R.)	1 A
R08	0106394	390kΩ ±5% ¼W C.R. (E.L.R.)	1 A
R09	0106183	18kΩ ±5% ¼W C.R. (E.L.R.)	1 A
R10	0106183	18kΩ ±5% ¼W C.R. (E.L.R.)	1 A
R11	0106102	1kΩ ±5% ¼W C.R. (E.L.R.)	1 A
R12	0106102	1kΩ ±5% ¼W C.R. (E.L.R.)	1 A
R13	0106123	12kΩ ±5% ¼W C.R. (E.L.R.)	1 A
R14	0106123	12kΩ ±5% ¼W C.R. (E.L.R.)	1 A
R15	0106123	12kΩ ±5% ¼W C.R. (E.L.R.)	1 A
R16	0106123	12kΩ ±5% ¼W C.R. (E.L.R.)	1 A
R17	0106821	820Ω ±5% ¼W C.R. (E.L.R.)	2 A
R18	0106821	820Ω ±5% ¼W C.R. (E.L.R.)	2 A
R19	0106221	220Ω ±5% ¼W C.R. (E.L.R.)	2 A
R20	0106221	220Ω ±5% ¼W C.R. (E.L.R.)	2 A
R21	0106682	6.8kΩ ±5% ¼W C.R. (E.L.R.)	1 A
R22	0106682	6.8kΩ ±5% ¼W C.R. (E.L.R.)	1 A
R23	0107224	220kΩ ±5% ¼W C.R.	2 A
R24	0107224	220kΩ ±5% ¼W C.R.	2 A
R25	0107222	2.2kΩ ±5% ¼W C.R.	2 A
R26	0107222	2.2kΩ ±5% ¼W C.R.	2 A
R27	0107183	18kΩ ±5% ¼W C.R.	2 B
R28	0107183	18kΩ ±5% ¼W C.R.	2 B
R29	0107222	2.2kΩ ±5% ¼W C.R.	2 A
R30	0107222	2.2kΩ ±5% ¼W C.R.	2 B
R31	0107472	4.7kΩ ±5% ¼W C.R.	2 B
R32	0107472	4.7kΩ ±5% ¼W C.R.	2 B
R33	0107224	220kΩ ±5% ¼W C.R.	2 A
R34	0107224	220kΩ ±5% ¼W C.R.	2 B
R35	0107222	2.2kΩ ±5% ¼W C.R.	2 B
R36	0107222	2.2kΩ ±5% ¼W C.R.	2 A, B
R37	0107183	18kΩ ±5% ¼W C.R.	2 B
R38	0107183	18kΩ ±5% ¼W C.R.	2 B
R39	0107472	4.7kΩ ±5% ¼W C.R.	2 B
R40	0107472	4.7kΩ ±5% ¼W C.R.	2 B
R41	0106683	68kΩ ±5% ¼W C.R. (E.L.R.)	1 B
R42	0106683	68kΩ ±5% ¼W C.R. (E.L.R.)	1 B
R43	0106394	390kΩ ±5% ¼W C.R. (E.L.R.)	1 B
R44	0106394	390kΩ ±5% ¼W C.R. (E.L.R.)	1 B
R45	0106563	56kΩ ±5% ¼W C.R. (E.L.R.)	1 B
R46	0106563	56kΩ ±5% ¼W C.R. (E.L.R.)	1 B
R47	0106561	560Ω ±5% ¼W C.R. (E.L.R.)	2 B
R48	0106561	560Ω ±5% ¼W C.R. (E.L.R.)	2 B
R49	0106562	5.6kΩ ±5% ¼W C.R. (E.L.R.)	1 B
R50	0106562	5.6kΩ ±5% ¼W C.R. (E.L.R.)	1 B
R51	0106154	150kΩ ±5% ¼W C.R. (E.L.R.)	1 B
R52	0106154	150kΩ ±5% ¼W C.R. (E.L.R.)	1 B
R53	0106682	6.8kΩ ±5% ¼W C.R. (E.L.R.)	1 B
R54	0106682	6.8kΩ ±5% ¼W C.R. (E.L.R.)	1 B
R55	0106821	820Ω ±5% ¼W C.R. (E.L.R.)	1 B
R56	0106821	820Ω ±5% ¼W C.R. (E.L.R.)	1 B
R57	0106220	22Ω ±5% ¼W C.R. (E.L.R.)	1 B
R58	0106220	22Ω ±5% ¼W C.R. (E.L.R.)	1 B
R59	0106332	3.3kΩ ±5% ¼W C.R. (E.L.R.)	1 B
R60	0106332	3.3kΩ ±5% ¼W C.R. (E.L.R.)	1 B
R61	0106563	56kΩ ±5% ¼W C.R. (E.L.R.)	1 B
R62	0106563	56kΩ ±5% ¼W C.R. (E.L.R.)	1 B
R63	0106104	100kΩ ±5% ¼W C.R. (E.L.R.)	1 B
R64	0106104	100kΩ ±5% ¼W C.R. (E.L.R.)	1 B
VR01	1010980, 1	100kΩ (W)×2 Variable Resistor	2 A
VR02	1010980, 1	100kΩ (W)×2 Variable Resistor	2 A
VR03	1010990	100kΩ (B)×2 Variable Resistor	2 B
VR04	1010990	100kΩ (B)×2 Variable Resistor	2 B

4-10. F-2084 QS Vario-Matrix Circuit Board

(Stock No. 7650410 Complete Circuit Board....QRX-5500A)
(Stock No. 7650430 Complete Circuit Board....QRX-7500A)

Conductor Side

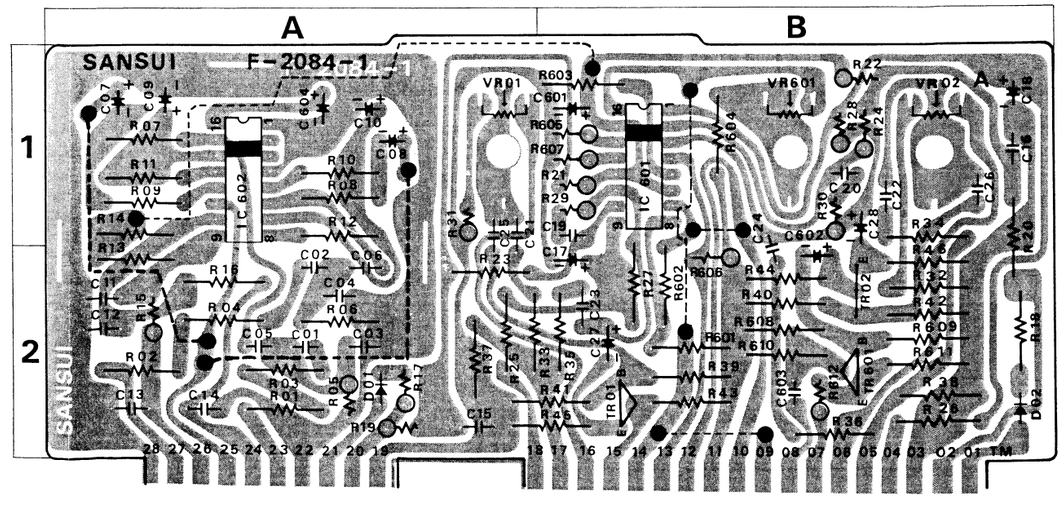

Parts List

Parts No.	Stock No.	Description			Position
TR01	0306011, 2 or 0306091, 2	2SC1222 (E, F) or 2SC1312R (G, H)	Transistor		2 B
TR02	0306011, 2 or 0306091, 2	2SC1222 (E, F) or 2SC1312R (G, H)	Transistor		2 B
TR601	0306090, 1	2SC1312R (F, G)	Transistor		2 B
IC601	0360100	HD3103PB	I.C.		1 B
IC602	0360090, 1	HA1327 (L, N)	I.C.		1 A
D01	0311160 or 0311180	1S2473D or 1S1588	Diode		2 A
D02	0311160 or 0311180	1S2473D or 1S1588	Diode		2 B
C01	0600106	0.001μF	50V	M.C.	2 A
C02	0600106	0.001μF	50V	M.C.	2 A
C03	0620471	470pF	50V	P.C.	2 A
C04	0620471	470pF	50V	P.C.	2 A
C05	0600106	0.001μF	50V	M.C.	2 A
C06	0600106	0.001μF	50V	M.C.	2 A
C07	0513479	4.7μF	25V	E.C.	1 A
C08	0513479	4.7μF	25V	E.C.	1 A
C09	0513479	4.7μF	25V	E.C.	1 A
C10	0513479	4.7μF	25V	E.C.	1 A
C11	0600687	0.068μF	50V	M.C.	2 A
C12	0600687	0.068μF	50V	M.C.	2 A
C13	0600567	0.056μF	50V	M.C.	2 A
C14	0600567	0.056μF	50V	M.C.	2 A
C15	0600187	0.018μF	50V	M.C.	2 A
C16	0600187	0.018μF	50V	M.C.	1 B
C17	0513100	10μF	25V	E.C.	2 B
C18	0513100	10μF	25V	E.C.	1 B
C19	0600226	0.0022μF	50V	M.C.	1 B
C20	0600226	0.0022μF	50V	M.C.	1 B
C21, 22	0620681	680pF	50V	P.C.	12, A . 1B
C23, 24	0600187	0.018μF	50V	M.C.	2B. 1, 2B
C25	0600477	0.047μF	50V	M.C.	1, 2 A
C26	0600227	0.022μF	50V	M.C.	1 B
C27	0515109	1μF	50V	E.C.	2 B
C28	0515109	1μF	50V	E.C.	1 B
C601	0515339	3.3μF	50V	E.C.	1 B
C602	0519102	3.3μF	50V	E.C.	2 B
C603	0600476	0.0047μF	50V	M.C.	2 B
C604	0513330	33μF	25V	E.C.	1 A
R01	0107152	1.5kΩ	¼W	C.R.	2 A
R02	0107152	1.5kΩ	¼W	C.R.	2 A
R03	0107562	5.6kΩ	¼W	C.R.	2 A
R04	0107562	5.6kΩ	¼W	C.R.	2 A
R05	0106473	47kΩ	¼W	C.R.	2 A
R06	0107473	47kΩ	¼W	C.R.	2 A
R07	0107274	270kΩ	¼W	C.R.	1 A
R08	0107274	270kΩ	¼W	C.R.	1 A
R09	0107124	120kΩ	¼W	C.R.	1 A
R10	0107124	120kΩ	¼W	C.R.	1 A
R11	0107394	390kΩ	¼W	C.R.	1 A
R12	0107394	390kΩ	¼W	C.R.	1 A
R13	0107124	120kΩ	¼W	C.R.	2 A
R14	0107124	120kΩ	¼W	C.R.	1 A
R15	0106563	56kΩ	¼W	C.R.	2 A
R16	0107563	56kΩ	¼W	C.R.	2 A
R17	0106334	330kΩ	¼W	C.R.	2 A
R18	0107824	820kΩ	¼W	C.R.	2 B
R19	0106394	390kΩ	¼W	C.R.	2 A
R20	0107394	390kΩ	¼W	C.R.	1, 2 B
R21	0106684	680kΩ	¼W	C.R.	1 B
R22	0106684	680kΩ	¼W	C.R.	1 B
R23	0107105	1MΩ	¼W	C.R.	2 A
R24	0106105	1MΩ	¼W	C.R.	1 B
R25	0107103	10kΩ	¼W	C.R.	2 A
R26	0107103	10kΩ	¼W	C.R.	2 B
R27	0107683	68kΩ	¼W	C.R.	2 B
R28	0106683	68kΩ	¼W	C.R.	1 B
R29	0106104	100kΩ	¼W	C.R.	1 B
R30	0106104	100kΩ	¼W	C.R.	1 B
R31	0106473	47kΩ	¼W	C.R.	1 A
R32	0107473	47kΩ	¼W	C.R.	2 B
R33, 34	0107153	15kΩ	¼W	C.R.	2A, B. 1B
R35, 36	0107331	330Ω	¼W	C.R.	2 B
R37, 38	0107224	220kΩ	¼W	C.R.	2 A . 2 B
R39	0107184	180kΩ	¼W	C.R.	2 B
R40	0107224	220kΩ	¼W	C.R.	2 B
R41	0107473	47kΩ	¼W	C.R.	2 A, B
R42	0107473	47kΩ	¼W	C.R.	2 B
R43	0107103	10kΩ	¼W	C.R.	2 B
R44	0107103	10kΩ	¼W	C.R.	2 B
R45	0107472	4.7kΩ	¼W	C.R.	2 A, B
R46	0107472	4.7kΩ	¼W	C.R.	2 B
R601	0107224	220kΩ	¼W	C.R.	2 B
R602	0107473	47kΩ	¼W	C.R.	2 B
R603	0107103	10kΩ	¼W	C.R.	1 B
R604	0107102	1kΩ	¼W	C.R.	1 B
R605	0106103	10kΩ	¼W	C.R.	1 B
R606	0106332	3.3kΩ	¼W	C.R.	2 B
R607	0106103	10kΩ	¼W	C.R.	1 B
R608	0107224	220kΩ	¼W	C.R.	2 B
R609	0107104	100kΩ	¼W	C.R.	2 B
R610	0107152	1.5kΩ	¼W	C.R.	2 B
R611	0107152	1.5kΩ	¼W	C.R.	2 B
R612	0106472	4.7kΩ	¼W	C.R.	2 B
VR01	1031520, 1	100kΩ (B)	Semi-Variable Resistor		1 A
VR02	1031520, 1	100kΩ (B)	Semi-Variable Resistor		1 B
VR601	1031480, 1	10kΩ (B)	Semi-Variable Resistor		1 B
	5037540	Shield Plate			
	5057930	Shield Cover			

4-11. F-2048 Vario-Matrix Circuit Board

(Stock No. 7650400 Complete Circuit Board....QRX-5500A)
(Stock No. 7650420 Complete Circuit Board....QRX-7500A)

Conductor Side

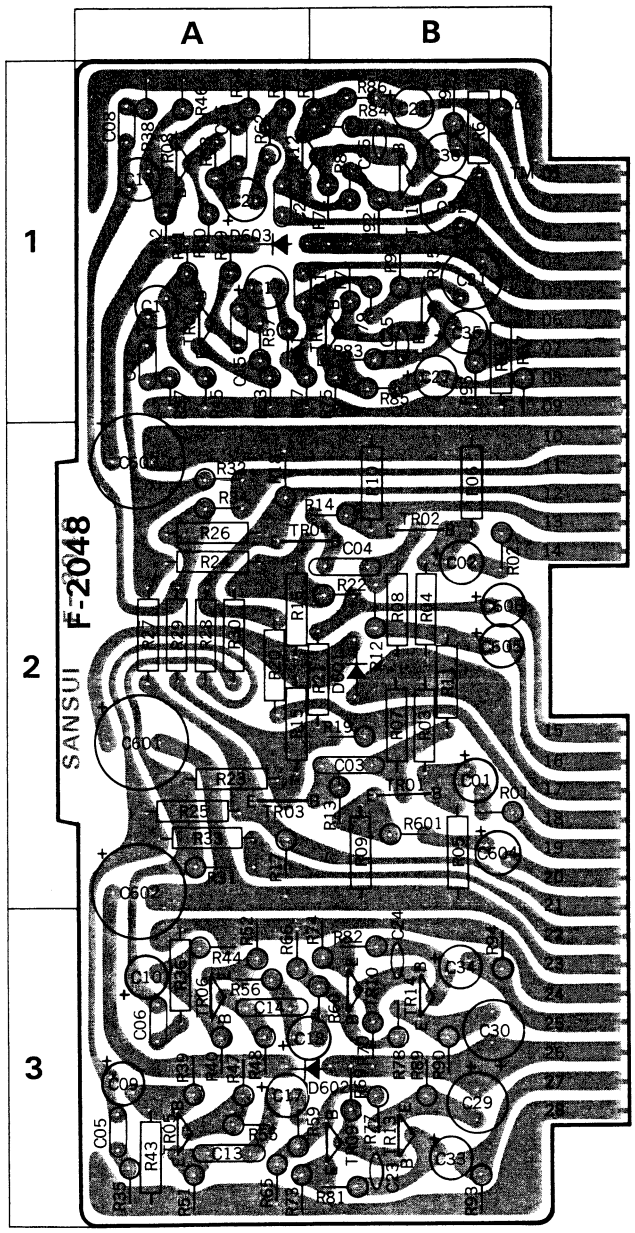

Parts List

Parts No.	Stock No.	Description		Position
TR01,02	0306011, 2 or 0306091, 2	2SC1222 (E, F) or 2SC1312Ⓡ (G, H)	Transistor	2 B
TR03,04	0306011, 2 or 0306091, 2	2SC1222 (E, F) or 2SC1312Ⓡ (G, H)	Transistor	2 A, B
TR05	0300470 or 0300410, 1	2SA726Ⓦ (F) or 2SA726Ⓡ (F, G)	Transistor	3 A
TR06,07	0306011, 2 or 0306091, 2	2SC1222 (E, F) or 2SC1312Ⓡ (G, H)	Transistor	3 A. 1 A
TR08	0300470 or 0300410, 1	2SA726Ⓦ (F) or 2SA726Ⓡ (F, G)	Transistor	1 A
TR09,10	0306011, 2 or 0306091, 2	2SC1222 (E, F) or 2SC1312Ⓡ (G, H)	Transistor	3 B
TR11,12	0306011, 2 or 0306091, 2	2SC1222 (E, F) or 2SC1312Ⓡ (G, H)	Transistor	1 B
TR13,14	0300470 or 0300410, 1	2SA726Ⓦ (F) or 2SA726Ⓡ (F, G)	Transistor	3 B
TR15,16	0300470 or 0300410, 1	2SA726Ⓦ (F) or 2SA726Ⓡ (F, G)	Transistor	1 B
D601	0310870 or 0310340	SR-1-FM2 or 10D-1	Diode	2 B
D602	0300470 or 0300340	SR-1-FM2 or 10D-1	Diode	3 A, B
D603	0310870 or 0310340	SR-1-FM2 or 10D-1	Diode	1 A
C01	0519102	3.3μF	50V E.C.	2 B
C02	0519102	3.3μF	50V E.C.	2 B
C03	0600107	0.01μF	50V M.C.	2 B
C04	0600107	0.01μF	50V M.C.	2 B
C05	0600157	0.015μF	50V M.C.	3 A
C06	0600157	0.015μF	50V M.C.	3 A
C07	0600107	0.01μF	50V M.C.	1 A
C08	0600107	0.01μF	50V M.C.	1 A
C09	0519105	2.2μF	50V E.C.	3 A
C10	0519105	2.2μF	50V E.C.	3 A
C11	0573108	0.1μF	25V T.C.	1 A
C12	0573108	0.1μF	25V T.C.	1 A
C13	0600607	0.06μF	50V M.C.	3 A
C14	0600607	0.06μF	50V M.C.	3 A
C15	0600126	0.0012μF	50V M.C.	1 A
C16	0600686	0.0068μF	50V M.C.	1 A
C17	0573228	0.22μF	25V T.C.	3 A
C18	0573228	0.22μF	25V T.C.	3 A, B
C19	0573228	0.22μF	25V T.C.	1 A
C20	0573228	0.22μF	25V T.C.	1 A
C21	0600106	0.001μF	±5% 50V M.C.	1 A
C22	0600156	0.0015μF	±5% 50V M.C.	1 A
C23	0660470	47 pF	50V C.C.	3 B
C24	0660470	47 pF	50V C.C.	3 B
C25	0660470	47 pF	50V C.C.	1 B
C26	0660470	47 pF	50V C.C.	1 B

Parts No.	Stock No.	Description	Position
C27	0513100	10μF 25V E.C.	1 B
C28	0513100	10μF 25V E.C.	1 B
C29	0510101	100μF 6.3V E.C.	3 B
C30	0510101	100μF 6.3V E.C.	3 B
C31	0510101	100μF 6.3V E.C.	1 B
C32	0510101	100μF 6.3V E.C.	1 B
C33	0573478	0.47μF 25V T.C.	3 B
C34	0573478	0.47μF 25V T.C.	3 B
C35	0573478	0.47μF 25V T.C.	1 B
C36	0573478	0.47μF 25V T.C.	1 B
C37	0660151	150 pF 50V C.C.	
C38	0660151	150 pF 50V C.C.	
C39	0660151	150 pF 50V C.C.	
C40	0660151	150 pF	
C601	0513221	220μF 25V E.C.	2 A
C602	0513221	220μF 25V E.C.	2, 3 A
C603	0513221	220μF 25V E.C.	1, 2 A
C604	0513100	10μF	2 B
C605	0573108	0.1μF 25V T.C.	2 B
C606	0573108	0.1μF 25V T.C.	2 B
R01	0106222	2.2kΩ ± 5% ¼W C.R. (E.L.R.)	2 B
R02	0106222	2.2kΩ ± 5% ¼W C.R. (E.L.R.)	2 B
R03	0107224	220kΩ ± 5% ¼W C.R.	2 B
R04	0107224	220kΩ ± 5% ¼W C.R.	2 B
R05	0107104	100kΩ ± 5% ¼W C.R.	2 B
R06	0107104	100kΩ ± 5% ¼W C.R.	2 B
R07	0107222	2.2kΩ ± 5% ¼W C.R.	2 B
R08	0107222	2.2kΩ ± 5% ¼W C.R.	2 B
R09	0107222	2.2kΩ ± 5% ¼W C.R.	2 B
R10	0107222	2.2kΩ ± 5% ¼W C.R.	2 B
R11	0107224	220kΩ ± 5% ¼W C.R.	2 B
R12	0106224	220kΩ ± 5% ¼W C.R. (E.L.R.)	2 B
R13	0106223	22kΩ ± 5% ¼W C.R. (E.L.R.)	2 B
R14	0106223	22kΩ ± 5% ¼W C.R. (E.L.R.)	2 B
R15	0107152	1.5kΩ ± 5% ¼W C.R.	2 A
R16	0107152	1.5kΩ ± 5% ¼W C.R.	2 A
R17	0106152	1.5kΩ ± 5% ¼W C.R. (E.L.R.)	2 A
R18	0106152	1.5kΩ ± 5% ¼W C.R. (E.L.R.)	2 A
R19	0106224	220kΩ ± 5% ¼W C.R. (E.L.R.)	2 B
R20	0107224	220kΩ ± 5% ¼W C.R.	2 A
R21	0107224	220kΩ ± 5% ¼W C.R.	2 B
R22	0106224	220kΩ ± 5% ¼W C.R. (E.L.R.)	2 B
R23	0107104	100kΩ ± 5% ¼W C.R.	2 A
R24	0107104	100kΩ ± 5% ¼W C.R.	2 A
R25	0107104	100kΩ ± 5% ¼W C.R.	2 A
R26	0107104	100kΩ ± 5% ¼W C.R.	2 A
R27	0107104	100kΩ ± 5% ¼W C.R.	2 A
R28	0107104	100kΩ ± 5% ¼W C.R.	2 A
R29	0107104	100kΩ ± 5% ¼W C.R.	2 A
R30	0107104	100kΩ ± 5% ¼W C.R.	2 A
R31	0106563	56kΩ ± 5% ¼W C.R. (E.L.R.)	2 A
R32	0106563	56kΩ ± 5% ¼W C.R. (E.L.R.)	2 A
R33	0107563	56kΩ ± 5% ¼W C.R.	2 A
R34	0106563	56kΩ ± 5% ¼W C.R. (E.L.R.)	2 A
R35	0106563	56kΩ ± 5% ¼W C.R. (E.L.R.)	3 A
R36	0107563	56kΩ ± 5% ¼W C.R.	3 A
R37	0106563	56kΩ ± 5% ¼W C.R. (E.L.R.)	1 A
R38	0106563	56kΩ ± 5% ¼W C.R. (E.L.R.)	1 A
R39	0106104	100kΩ ± 5% ¼W C.R. (E.L.R.)	3 A
R40	0106224	220kΩ ± 5% ¼W C.R. (E.L.R.)	3 A
R41	0106224	220kΩ ± 5% ¼W C.R. (E.L.R.)	1.A
R42	0106104	100kΩ ± 5% ¼W C.R. (E.L.R.)	1 A

Parts No.	Stock No.	Description	Position
R43	0107224	220kΩ ± 5% ¼W C.R.	3 A
R44	0106104	100kΩ ± 5% ¼W C.R. (E.L.R.)	3 A
R45	0106104	100kΩ ± 5% ¼W C.R. (E.L.R.)	1 A
R46	0106224	220kΩ ± 5% ¼W C.R. (E.L.R.)	1 A
R47	0106682	6.8kΩ ± 5% ¼W C.R. (E.L.R.)	3 A
R48	0106682	6.8kΩ ± 5% ¼W C.R. (E.L.R.)	3 A
R49	0106682	6.8kΩ ± 5% ¼W C.R. (E.L.R.)	1 A
R50	0106682	6.8kΩ ± 5% ¼W C.R. (E.L.R.)	1 A
R51	0106682	6.8kΩ ± 5% ¼W C.R. (E.L.R.)	3 A
R52	0106682	6.8kΩ ± 5% ¼W C.R. (E.L.R.)	3 A
R53	0106682	6.8kΩ ± 5% ¼W C.R. (E.L.R.)	1 A
R54	0106682	6.8kΩ ± 5% ¼W C.R. (E.L.R.)	1 A
R55	0106223	22kΩ ± 5% ¼W C.R. (E.L.R.)	3 A
R56	0106223	22kΩ ± 5% ¼W C.R. (E.L.R.)	3 A
R57	0106153	15kΩ ± 5% ¼W C.R. (E.L.R.)	1 A
R58	0106153	15kΩ ± 5% ¼W C.R. (E.L.R.)	1 A
R59	0106223	22kΩ ± 5% ¼W C.R. (E.L.R.)	3 A
R60	0106223	22kΩ ± 5% ¼W C.R. (E.L.R.)	3 B
R61	0106223	22kΩ ± 5% ¼W C.R. (E.L.R.)	1 A
R62	0106223	22kΩ ± 5% ¼W C.R. (E.L.R.)	1 A
R63	0107104	100kΩ ± 5% ¼W C.R.	1 B
R64	0107104	100kΩ ± 5% ¼W C.R.	1 B
R65	0106154	150kΩ ± 5% ¼W C.R. (E.L.R.)	3 A
R66	0106154	150kΩ ± 5% ¼W C.R. (E.L.R.)	3 A
R67	0106154	150kΩ ± 5% ¼W C.R. (E.L.R.)	1 A, B
R68	0106154	150kΩ ± 5% ¼W C.R. (E.L.R.)	1 A
R69	0106124	120kΩ ± 5% ¼W C.R. (E.L.R.)	3 B
R70	0106124	120kΩ ± 5% ¼W C.R. (E.L.R.)	3 B
R71	0106124	120kΩ ± 5% ¼W C.R. (E.L.R.)	1 B
R72	0106124	120kΩ ± 5% ¼W C.R. (E.L.R.)	1 B
R73	0106392	3.9kΩ ± 5% ¼W C.R. (E.L.R.)	3 A
R74	0106392	3.9kΩ ± 5% ¼W C.R. (E.L.R.)	3 B
R75	0106392	3.9kΩ ± 5% ¼W C.R. (E.L.R.)	1 B
R76	0106392	3.9kΩ ± 5% ¼W C.R. (E.L.R.)	1 A, B
R77	0106824	820kΩ ± 5% ¼W C.R. (E.L.R.)	3 B
R78	0106824	820kΩ ± 5% ¼W C.R. (E.L.R.)	3 B
R79	0106824	820kΩ ± 5% ¼W C.R. (E.L.R.)	1 B
R80	0106824	820kΩ ± 5% ¼W C.R. (E.L.R.)	1 B
R81	0106123	12kΩ ± 5% ¼W C.R. (E.L.R.)	3 B
R82	0106123	12kΩ ± 5% ¼W C.R. (E.L.R.)	3 B
R83	0106123	12kΩ ± 5% ¼W C.R. (E.L.R.)	1 B
R84	0106123	12kΩ ± 5% ¼W C.R. (E.L.R.)	1 B
R85	0106123	12kΩ ± 5% ¼W C.R. (E.L.R.)	1 B
R86	0106123	12kΩ ± 5% ¼W C.R. (E.L.R.)	1 B
R87	0106104	100kΩ ± 5% ¼W C.R. (E.L.R.)	1 B
R88	0106104	100kΩ ± 5% ¼W C.R. (E.L.R.)	1 B
R89	0106122	1.2kΩ ± 5% ¼W C.R. (E.L.R.)	3 B
R90	0106122	1.2kΩ ± 5% ¼W C.R. (E.L.R.)	3 B
R91	0106122	1.2kΩ ± 5% ¼W C.R. (E.L.R.)	1 B
R92	0106122	1.2kΩ ± 5% ¼W C.R. (E.L.R.)	1 B
R93	0106104	100kΩ ± 5% ¼W C.R. (E.L.R.)	3 B
R94	0106104	100kΩ ± 5% ¼W C.R. (E.L.R.)	3 B
R95	0106104	100kΩ ± 5% ¼W C.R. (E.L.R.)	1 B
R96	0106104	100kΩ ± 5% ¼W C.R. (E.L.R.)	1 B
R601	0106822	8.2kΩ ± 5% ¼W C.R. (E.L.R.)	1 B

4-12. F-1489 Mixing & Accessory Circuit Board

(Stock No. 7610060 Complete Circuit Board....QRX-5500A)

Conductor Side

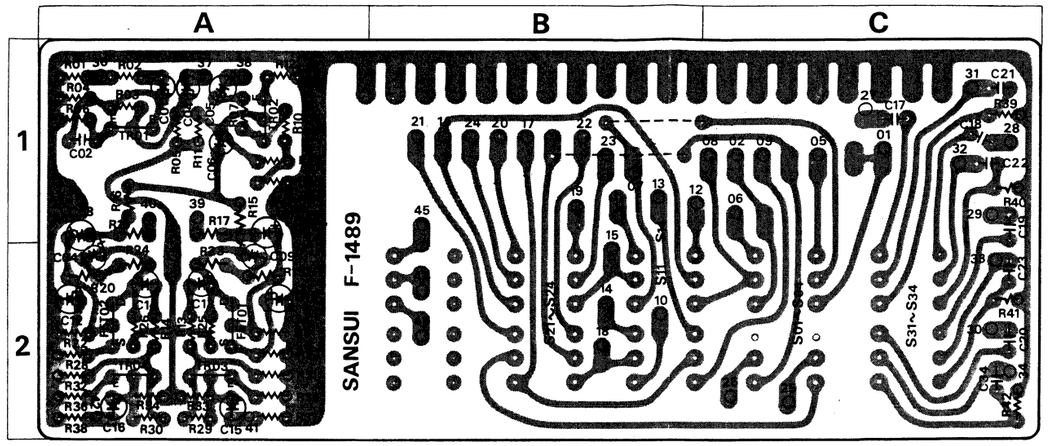

Parts List

Parts No.	Stock No.	Description	Position
TR01	0305880, 1 or 0306011, 2 or 0306071, 2	2SC1000 (GR, BL) or 2SC1222 (E, F) or 2SC1313 (G, H) Transistor	1 A
TR02	0305880, 1 or 0306011, 2 or 0306071, 2	2SC1000 (GR, BL) or 2SC1222 (E, F) or 2SC1313 (G, H) Transistor	1 A
TR03	0305880, 1 or 0306011, 2 or 0306071, 2	2SC1000 (GR, BL) or 2SC1222 (E, F) or 2SC1313 (G, H) Transistor	2 A
TR04	0305880, 1 or 0306011, 2 or 0306071, 2	2SC1000 (GR, BL) or 2SC1222 (E, F) or 2SC1313 (G, H) Transistor	2 A
C01	0573108	0.1μF 35WV T.C.	1 A
C02	0657101	100 pF 50V C.C.	1 A
C03	0657471	470 pF 50V C.C.	
C04	0573478	0.47μF 35V T.C.	1 A
C05	0573478	0.47μF 35V T.C.	1 A
C06	0515109	1μF 50V E.C.	1 A
C07, 08	0573688	0.68μF 35WV T.C.	1, 2 A
C09, 10	0510470	47μF 6.3V E.C.	2 A
C11, 12	0519105	2.2μF 50V E.C.	2 A
C13	0620151	150 pF 50V P.C.	2 A
C14	0620151	150 pF 50V P.C.	2 A
C15	0620151	150 pF 50V P.C.	2 A
C16	0620151	150 pF 50V P.C.	2 A
C17	0600227	0.022μF 50V M.C.	1 C
C18	0600227	0.022μF 50V M.C.	1 C
C19	0600227	0.022μF 50V M.C.	1 C
C20	0600227	0.022μF 50V M.C.	2 C

Parts No.	Stock No.	Description	Position
R01	0106103	10kΩ ¼W C.R.	1 A
R02	0106102	1kΩ ¼W C.R.	1 A
R03	0106394	390kΩ ¼W C.R.	1 A
R04	0106563	56kΩ ¼W C.R.	1 A
R05	0106333	33kΩ ¼W C.R.	1 A
R06	0106272	2.7kΩ ¼W C.R.	1 A
R07	0106272	2.7kΩ ¼W C.R.	1 A
R08	0106564	560kΩ ¼W C.R.	1 A
R09	0106474	470kΩ ¼W C.R.	1 A
R10	0106274	270kΩ ¼W C.R.	1 A
R11	0106393	39kΩ ¼W C.R.	1 A
R13, 14	0106104	100kΩ ¼W C.R.	2 A
R15, 16	0106104	100kΩ ¼W C.R.	1 A
R17, 18	0107274	270kΩ ¼W C.R.	1 A
R19, 20	0106474	470kΩ ¼W C.R.	2 A
R21, 22	0106223	22kΩ ¼W C.R.	2 A
R23, 24	0106472	4.7kΩ ¼W C.R.	2 A
R25, 26	0107104	100kΩ ¼W C.R.	2 A
R27	0106333	33kΩ ¼W C.R.	2 A
R28	0106333	33kΩ ¼W C.R.	2 A
R29	0106333	33kΩ ¼W C.R.	2 A
R30	0106333	33kΩ ¼W C.R.	2 A
S01	1130750	Push Switch	2 C

4-13. F-1514 Driver Circuit Board (Stock No. 7571230 Complete Circuit Board....QRX-7500A)

Parts List

Parts No.	Stock No.	Description		Position
TR01, 02	0300302, 3 or 0300410, 1	2SA640 (K, L) or 2SA726® (F, G)	Transistor	2D.2C
TR03, 04	0300302, 3 or 0300410, 1	2SA640 (K, L) or 2SA726® (F, G)	Transistor	2B.2A
TR05, 06	0300302, 3 or 0300410, 1	2SA640 (K, L) or 2SA726® (F, G)	Transistor	2D.2C
TR07, 08	0300302, 3 or 0300410, 1	2SA640 (K, L) or 2SA726® (F, G)	Transistor	2B.2A
TR09, 10	0306020, 1 or 0305980~2	2SC983 (O, R) or 2SC875 (D, E, F)	Transistor	2D.2C
TR11, 12	0306020, 1 or 0305980~2	2SC983 (O, R) or 2SC875 (D, E, F)	Transistor	2B.2A
TR13, 14	0305872	2SC984 (C)	Transistor	1D.1C
TR15, 16	0305872	2SC984 (C)	Transistor	1B.1A
TR17, 18	0305901	2SC1124 (2)	Transistor	1D.1C
TR19, 20	0305901	2SC1124 (2)	Transistor	1B.1A
TR21, 22	0300401	2SA706 (2)	Transistor	1D.1C
TR23, 24	0300401	2SA706 (2)	Transistor	1B.1A
TR25, 26	0305631, 2 or 0305830, 1	2SC1030 (B, C) or 2SC1111 (O, R)	Transistor	1D.1C
TR27, 28			Transistor	1B.1A
TR29, 30	0300551, 2 or 0300580, 1	2SA756 (B, C) or 2SA744 (O, R)	Transistor	1D.1C
TR31, 32			Transistor	1B.1A
TR601	0300680	2SA733 ② (P)	Transistor	
TR602	0300681	2SA733 ② (Q)	Transistor	
D01, 02	0311180 or 0311160 or 0340090	1S1588 or 1S2473 or DS-430	Diode	2D.2C
D03, 04	0311180 or 0311160 or 0340090	1S1588 or 1S2473 or DS-430	Diode	2B.2A
D05, 06	0311180 or 0311160 or 0340090	1S1588 or 1S2473 or DS-430	Diode	2D.2C
D07, 08	0311180 or 0311160 or 0340090	1S1588 or 1S2473 or DS-430	Diode	2B.2A
ZD01, 02	0316300	RD-12E(C)	Zener Diode	2D.2C
ZD03, 04	0316300	RD-12E(C)	Zener Diode	2B.2A
L01, 02	4290210	2R5K	Coil	2D.2C
L03, 04	4290210	2R5K	Coil	2B.2A
C01, 02	0519103	0.47μF	50V E.C.	2D.2C
C03, 04	0519103	0.47μF	50V E.C.	2B.2A
C05, 06	0660680	68pF	50V E.C.	2D.2C
C07, 08	0660680	68pF	50V E.C.	2B.2A

Conductor Side

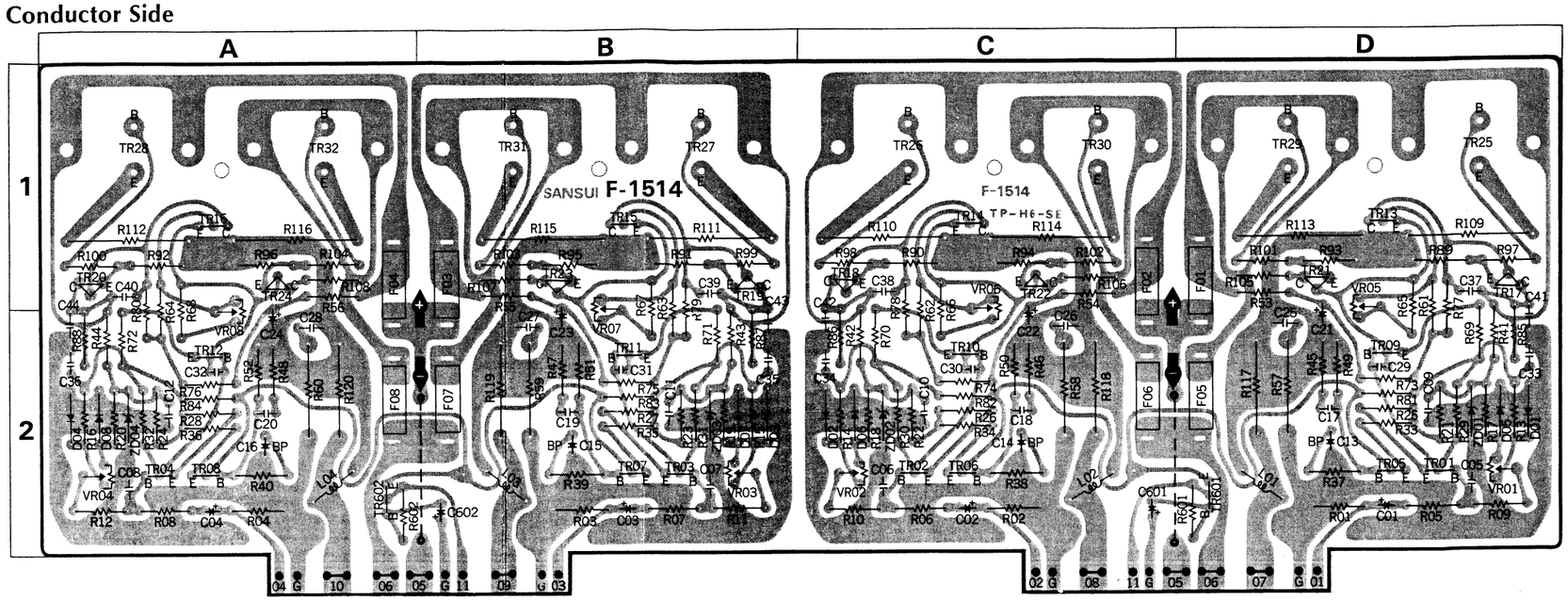

Parts No.	Stock No.	Description		Position
C09, 10	0657473	0.047μF	50V E.C.	2D.2C
C11, 12	0657473	0.047μF	50V E.C.	2B.2A
C13, 14	0531101	100μF	BP.E.C.	2D.2C
C15, 16	0531101	100μF	BP.E.C.	2B.2A
C21, 22	0515100	10μF	50V E.C.	2D.2C
C23, 24	0515100	10μF	50V E.C.	1,2B.2A
C25, 26	0600687	0.068μF	50V M.C.	2D.2C
C27, 28	0600687	0.068μF	50V M.C.	2B.2A
C29, 30	0660220	22pF	50V C.C.	2D.2C
C31, 32	0660220	22pF	50V C.C.	2B.2A
C33, 34	0657473	0.047μF	50V C.C.	2D.2C
C35, 36	0657473	0.047μF	50V C.C.	2B.2A
C37, 38	0660101	100pF	50V C.C.	2D.1C
C39, 40	0660101	100pF	50V C.C.	2B.1A
C601	0515330	33μF	50V E.C.	2C
C602	0515330	33μF	50V E.C.	2B
C901	0657221	220pF	50V C.C.	
C902	0657221	220pF	50V C.C.	
C903	0657221	220pF	50V C.C.	
C904	0657221	220pF	50V C.C.	
C905	0657101	100pF	50V C.C.	
C906	0657101	100pF	50V C.C.	
C907	0657101	100pF	50V C.C.	
C908	0657101	100pF	50V C.C.	
C909	0515330	33μF	50V E.C.	
R01, 02	0107104	100kΩ	¼W C.R.	2D.2C
R03, 04	0107104	100kΩ	¼W C.R.	2B.2A
R05, 06	0107103	10kΩ	¼W C.R.	2D.2C
R07, 08	0107103	10kΩ	¼W C.R.	2B.2A
R09, 10	0107104	100kΩ	¼W C.R.	2D.2C
R11, 12	0107104	100kΩ	¼W C.R.	2B.2A

Parts No.	Stock No.	Description		Position
R13, 14	0107183	18kΩ	¼W C.R.	2D.2C
R15, 16	0107183	18kΩ	¼W C.R.	2B.2A
R17, 18	0107683	68kΩ	¼W C.R.	2D.2C
R19, 20	0107683	68kΩ	¼W C.R.	2B.2A
R21, 22	0107103	10kΩ	¼W C.R.	2D.2C
R23, 24	0107103	10kΩ	¼W C.R.	2B.2A
R25, 26	0107100	10Ω	¼W C.R.	2D.2C
R27, 28	0107100	10Ω	¼W C.R.	2B.2A
R29, 30	0107152	1.5kΩ	¼W C.R.	2D.2C
R31, 32	0107152	1.5kΩ	¼W C.R.	2B.2A
R33, 34	0107100	10Ω	¼W C.R.	2D.2C
R35, 36	0107100	10Ω	¼W C.R.	2B.2A
R37, 38	0107332	3.3kΩ	¼W C.R.	2D.2C
R39, 40	0107332	3.3kΩ	¼W C.R.	2B.2A
R41, 42	0107682	6.8kΩ	¼W C.R.	2D.2C
R43, 44	0107682	6.8kΩ	¼W C.R.	2B.2A
R49, 50	0107563	56kΩ	¼W C.R.	2D.2C
R51, 52	0107563	56kΩ	¼W C.R.	2B.2A
R53, 54	0107182	1.8kΩ	¼W C.R.	2D.1C
R55, 56	0107182	1.8kΩ	¼W C.R.	1B.1A
R57, 58	0152100	10Ω	2W Ce.R.	2D.2C
R59, 60	0152100	10Ω	2W Ce.R.	2B.2A
R61, 62	0107332	3.3kΩ	¼W C.R.	1,2D.1,2C
R63, 64	0107332	3.3kΩ	¼W C.R.	1,2B.1,2A
R65, 66	0107821	820Ω	¼W C.R.	1,2D.1,2C
R67, 68	0107821	820Ω	¼W C.R.	1,2B.1,2A
R69, 70	0107680	68Ω	¼W C.R.	2D.2C
R71, 72	0107680	68Ω	¼W C.R.	2B.2A
R73, 74	0107472	4.7kΩ	¼W C.R.	2D.2C
R75, 76	0107472	4.7kΩ	¼W C.R.	2B.2A
R77, 78	0107390	39Ω	¼W C.R.	1,2D.1,2C

Parts No.	Stock No.	Description		Position
R79, 80	0107390	39Ω	¼W C.R.	1,2B.1,2A
R81, 82	0107479	4.7Ω	¼W C.R.	2D.2C
R83, 84	0107479	4.7Ω	¼W C.R.	2B.2A
R89, 90	0107221	220Ω	¼W C.R.	1D.1C
R91, 92	0107221	220Ω	¼W C.R.	1B.1A
R93, 94	0107221	220Ω	¼W C.R.	1D.1C
R95, 96	0107221	220Ω	¼W C.R.	1B.1A
R97, 98	0107689	6.8Ω	¼W C.R.	1D.1C
R99, 100	0107689	6.8Ω	¼W C.R.	1B.1A
R101, 102	0107689	6.8Ω	¼W C.R.	1D.1C
R103, 104	0107689	6.8Ω	¼W C.R.	1B.1A
R109, 110	0133478	0.47Ω	3W Ce.R.	1D.1C
R111, 112	0133478	0.47Ω	3W Ce.R.	1B.1A
R113, 114	0133478	0.47Ω	3W Ce.R.	1D.1C
R115, 116	0133478	0.47Ω	3W Ce.R.	1B.1A
R117, 118	0104479	4.7Ω	1W C.R.	2D.2C
R119, 120	0104479	4.7Ω	1W C.R.	2B.2A
R601	0107222	2.2kΩ	¼W C.R.	2D
R602	0107222	2.2kΩ	¼W C.R.	2A
VR01, 02	1035110	4.7kΩ (B)	Semi-Variable Resistor	2D.2C
VR03, 04	1035110	4.7kΩ (B)	Semi-Variable Resistor	2B.2A
VR05, 06	1035070	1.0kΩ (B)	Semi-Variable Resistor	1,2D.1,2C
VR07, 08	1035070	1.0kΩ (B)	Semi-Variable Resistor	1,2B.1,2A
F01, 02	0433640	5A	Quick Acting Fuse	1,2D.1,2C
F03, 04	0433640	5A	Quick Acting Fuse	1,2B.1,2A
F05, 06	0433640	5A	Quick Acting Fuse	2D.2C
F07, 08	0433640	5A	Quick Acting Fuse	2B.2A

4-14. F-1482 Driver Circuit Board (Stock No. 7571220 Complete Circuit Board....QRX-5500A)

Conductor Side

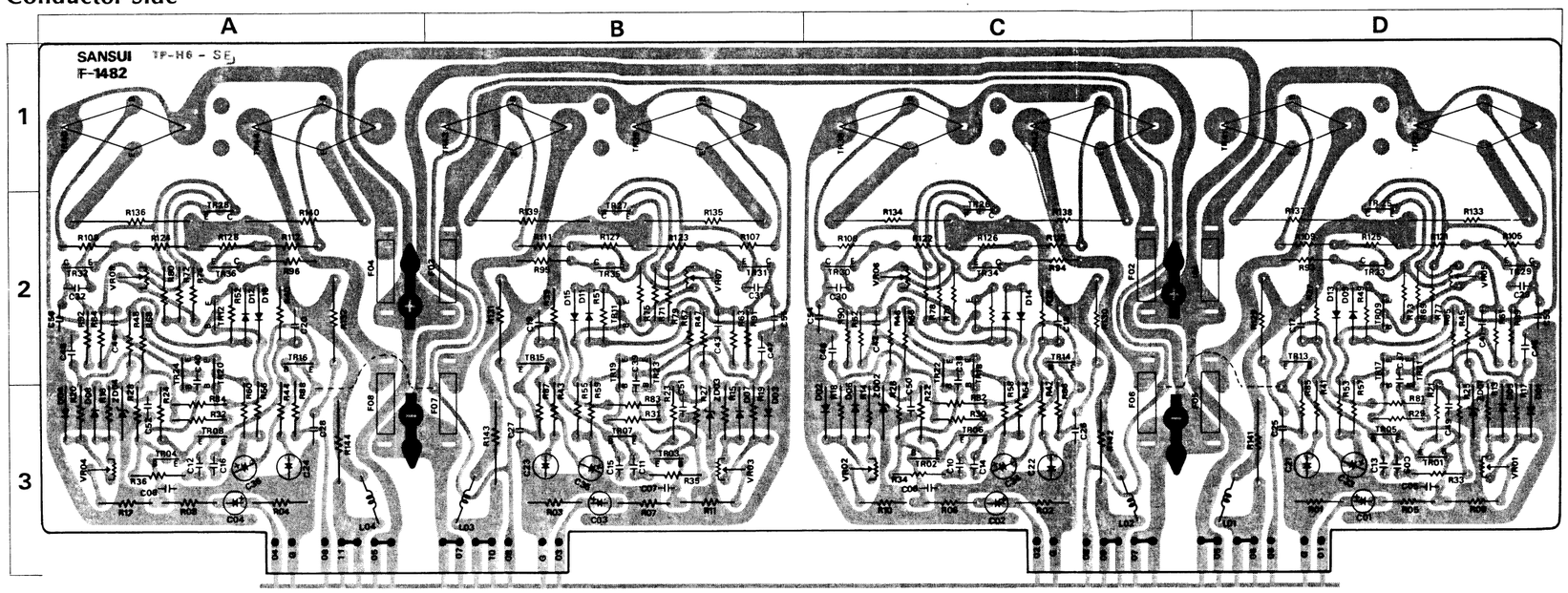

Parts List

Parts No.	Stock No.	Description	Position
TR01	0300470, 1	2SA726 (F, G) Transistor	3 D
TR02	0300470, 1	2SA726 (F, G)	3 C
TR03	0300470, 1	2SA726 (F, G)	3 B
TR04	0300470, 1	2SA726 (F, G)	3 A
TR05	0300470, 1	2SA726 (F, G)	3 D
TR06	0300470, 1	2SA726 (F, G)	3 C
TR07	0300470, 1	2SA726 (F, G)	3 B
TR08	0300470, 1	2SA726 (F, G)	3 A
TR21	0306171, 2	2SC1509 (Q, R)	2, 3 D
TR22	0306171, 2	2SC1509 (Q, R)	2, 3 D
TR23	0306171, 2	2SC1509 (Q, R)	2, 3 B
TR24	0306171, 2	2SC1509 (Q, R)	2, 3 A
TR25	0305121	2SC281 (B)	2 D
TR26	0305121	2SC281 (B)	2 C
TR27	0305121	2SC281 (B)	2 B
TR28	0305121	2SC281 (B)	2 A
TR29	0306171 or 0306172	2SC1509 (Q) or 2SC1509 (R)	2 D
TR30	0306171 or 0306172	2SC1509 (Q) or 2SC1509 (R)	2 C
TR31	0306171 or 0306172	2SC1509 (Q) or 2SC1509 (R)	2 B
TR32	0306171 or 0306172	2SC1509 (Q) or 2SC1509 (R)	2 A
TR33	0300591 or 0300592	2SA777 (Q) or 2SA777 (R)	2 B
TR34	0300591 or 0300592	2SA777 (Q) or 2SA777 (R)	2 C

Parts No.	Stock No.	Description	Position
TR35	0300591 or 0300592	2SA777 (Q) or 2SA777 (R) Transistor	2 B
TR36	0300591 or 0300592	2SA777 (Q) or 2SA777 (R)	2 A
TR37	0305631 or 0305632 or 0305831 or 0305832	2SC1030 (B) or 2SC1030 (C) or 2SC1111 (O) or 2SC1111 (Y)	1 D
TR38	0305631 or 0305632 or 0305831 or 0305832	2SC1030 (B) or 2SC1030 (C) or 2SC1111 (O) or 2SC1111 (Y)	1 C
TR39	0305631 or 0305632 or 0305831 or 0305832	2SC1030 (B) or 2SC1030 (C) or 2SC1111 (O) or 2SC1111 (Y)	1 B
TR40	0305631 or 0305632 or 0305831 or 0305832	2SC1030 (B) or 2SC1030 (C) or 2SC1111 (O) or 2SC1111 (Y)	1 A

Parts No.	Stock No.	Description	Position
TR41	0300551 or 0300552 or 0300581 or 0300582	2SA756 (B) or 2SA756 (C) or 2SA744 (O) or 2SA744 (Y) Transistor	1 D
TR42	0300551 or 0300552 or 0300581 or 0300582	2SA756 (B) or 2SA756 (C) or 2SA744 (O) or 2SC744 (Y)	1 C
TR43	0300551 or 0300552 or 0300581 or 0300582	2SA756 (B) or 2SA756 (C) or 2SA744 (O) or 2SA744 (Y)	1 B
TR44	0300551 or 0300552 or 0300581 or 0300582	2SA756 (B) or 2SA756 (C) or 2SA744 (O) or 2SA744 (Y)	1 A
D01	0340090	DS-430 Varistor	3 D
D02	0340090	DS-430	3 D
D03	0340090	DS-430	3 D

Parts No.	Stock No.	Description	Position
D04	0340090	DS-430 Varistor	3 A
D05	0340090	DS-430	3 D
D06	0340090	DS-430	3 C
D07	0340090	DS-430	3 B
D08	0340090	DS-430	3 A
ZD01	0316300	RD-12E (C) Zener Diode	3 D
C01~04	0515109	1μF 50V E.C.	3D,C,B,A
C05~08	0657680	68 pF 50V C.C.	3D,C,B,A
C09~12	0657102	1000 pF	3D,C,B,A
C13~16	0657330	33 pF	3D,C,B,A
C17~20	0657150	15 pF	2D,C,B,A
C21~24	0511101	100μF 10V E.C.	3D,C,B,A
C25~28	0600108	0.1μF 50V M.C.	3D,C,B,A
C29~32	0657470	47 pF 50V C.C.	2D,C,B,A
C33~36	0515101	100μF 50V E.C.	3D,C,B,A
C37~40	0657470	47 pF 50V C.C.	2,3D,C,B,A
C45~48	0657473	47000 pF	2D,C,B,A
C50	0512470	47μF 16V E.C.	3 C
C53~56	0657473	47000 pF 50V C.C.	2D,C,B,A
C57~60	0515100	10μF 50V E.C.	
C61~64	0515109	1μF	
R01~04	0107154	150kΩ ¼W C.R.	3D,C,B,A
R05~08	0107103	10kΩ	3D,C,B,A
R09~12	0107104	100kΩ	3D,C,B,A
R13~16	0107822	8.2kΩ	3D,C,B,A
R17~20	0107473	47kΩ	3D,C,B,A
R21~24	0107103	10kΩ	3D,C,B,A
R25~28	0107152	1.5kΩ	3D,C,B,A
R29~32	0107152	1.5kΩ	3D,C,B,A
R33~36	0107221	220Ω	3D,C,B,A
R37~40	0107683	68kΩ	2D,C,B,A
R41~44	0107392	3.9kΩ	3D,C,B,A
R45	0103102	1kΩ ½W C.R.	2 D
R61~64	0107101	100Ω ¼W C.R.	2D,C,B,A
R65~68	0107100	10Ω	2D,C,B,A
R69~72	0107562	5.6kΩ	2D,C,B,A
R73~76	0107152	1.5kΩ	2D,C,B,A
R77~80	0107330	33Ω	2D,C,B,A
R85~88	0107151	150Ω	3D,C,B,A
R89~92	0107100	10Ω	2D,C,B,A
R93~96	0107100	10Ω	2D,C,B,A
R105~108	0107689	6.8Ω	2D,C,B,A
R109~112	0107689	6.8Ω	2D,C,B,A
R121~124	0107221	220Ω	2D,C,B,A
R125~128	0107221	220Ω	2D,C,B,A
R129~132	0132479	4.7Ω 2W Ce.R.	2D,C,B,A
R133~136	0133478	0.47Ω 3W Ce.R.	2D,C,B,A
R137~140	0133478	0.47Ω	2D,C,B,A
R141~144	0103100	10Ω ½W C.R.	2D,C,B,A
R145~148	0106332	3.3kΩ ¼W C.R.	
R149~152	0106682	6.8kΩ	
L01~04	4290210	Filter Coil	
VR01~04	1035110	4.7kΩ (B) Semi-Variable Resistor	2D,C,B,A
VR05~08	1035070	1kΩ (B)	2D,C,B,A
F01~04	0433640	5A 250V Fuse	2D,C,B,A
F05~08	0433640	5A 250V	3D,C,B,A
	2310150	Fuse Holder	

4-15. F-2589 Equalizer & CD-4 Circuit Board (Stock No. 7550760 Complete Circuit Board....QRX-7500A)

Conductor Side

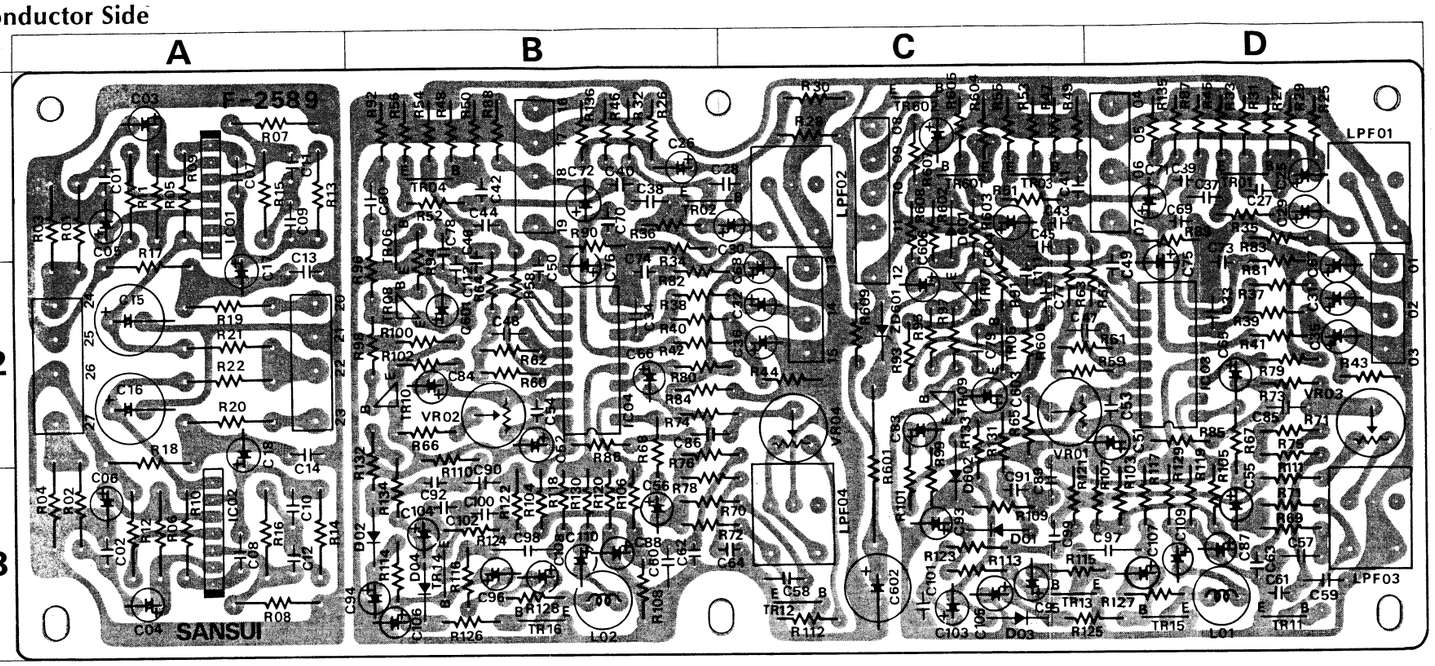

Parts List

Parts No.	Stock No.	Description	Position
TR01, 02	0306011, 2 or 0306070, 1	2SC1222 (E, F) or 2SC1313 (F, G) Transistor	1 B
TR03, 04	0306011, 2 or 0306070, 1	2SC1222 (E, F) or 2SC1313 (F, G) Transistor	1 C . 1 B
TR05, 06	0305951~3	2SC945 (Q,P,K) Transistor	2C. 1, 2B
TR07, 08	0300510, 1	2SA733 (P, Q) Transistor	2 C . 2 B
TR09, 10	0305951~3	2SC945 (Q,P,K) Transistor	2 C . 2 B
TR11, 12	0305951~3	2SC945 (Q,P,K) Transistor	3 B . 3 C
TR13, 14	0305952	2SC945 (P) Transistor	3C, D. 3B
TR15, 16	0305952	2SC945 (P) Transistor	3 B
TR601	0305951~3	2SC945 (Q,P,K) Transistor	1 C
TR602	0305951~3	2SC945 (Q,P,K) Transistor	1 C
IC01, 02	0360190	BA312 I.C.	1 A . 3 A
IC03, 04	0360330	CD4, 392 I.C.	2 D . 2 B
D01, 02	0311160	1S2473D Diode	3 C . 3 B
D03, 04	0311160	1S2473D Diode	3 C . 3 B
D601	0311160	1S2473D Diode	1 C
D602	0311160	1S2473D Diode	2, 3 C
ZD601	0316290	RD-12E B Diode	2 C
C01, 02	0660470	47 pF 50V C.C.	1 A . 3 A
C03, 04	0519102	3.3μF 50V E.C.	1 A . 3 A
C05, 06	0510470	47μF 6.3V E.C.	1 A . 3 A
C07, 08	0660150	15 pF 50V C.C.	1 A . 3 A
C09, 10	0600227	0.022μF 50V M.C.	1 A . 3 A
C11, 12	0600686	0.0068μF 50V M.C.	1 A . 3 A
C13, 14	0660331	330 pF 50V C.C.	2 A
C15, 16	0514101	100μF 35V E.C.	2 A
C17, 18	0519101	1μF 50V E.C.	1,2A.2,3A
C25, 26	0519101	1μF 50V E.C.	1 C . 1 B
C27, 28	0660221	220 pF 50V C.C.	1 D . 1B, C
C29, 30	0513479	4.7μF 25V E.C.	1D. 1B,C
C31, 32	0515109	1μF 50V E.C.	2 C
C33, 34	0660331	330 pF 50V C.C.	2 D . 2 B
C35, 36	0512100	10μF 16V E.C.	2 D . 2 C
C37, 38	0600477	0.047μF 50V M.C.	1 D . 1 B
C39, 40	0600106	0.001μF 50V M.C.	1 D . 1 B
C41, 42	0600106	0.001μF 50V M.C.	1 C . 1 B
C43, 44	0601187	0.018μF 50V M.C.	1 C . 1 B
C45, 46	0601187	0.018μF 50V M.C.	1C. 1,2B
C47, 48	0660151	150 pF 50V C.C.	2C,D. 2B
C49, 50	0600107	0.01μF 50V M.C.	2 D . 2 B
C51, 52	0512100	10μF 16V E.C.	2 D . 2 B
C53, 54	0600826	0.0082μF 50V M.C.	2 D . 2 B
C55, 56	0513479	4.7μF 25V E.C.	3 D . 3 B
C57, 58	0600827	0.082μF 50V M.C.	3 D . 3 C
C59, 60	0600567	0.056μF 50V M.C.	3 D . 3 B
C61, 62	0600107	0.01μF 50V M.C.	3 D . 3 B
C63, 64	0600826	0.0082μF 50V M.C.	3 D . 3 C
C65, 66	0515109	1μF 50V E.C.	2 D . 2 B
C67, 68	0512100	10μF 16V E.C.	2 D . 2 C
C69, 70	0657222	2200 pF 50V C.C.	1 D . 1 B
C71, 72	0519101	1μF 50V E.C.	1 D . 1 B
C73, 74	0657222	2200 pF 50V C.C.	2 D . 2 B
C75, 76	0519101	1μF 50V E.C.	1,2 D . 2B
C77, 78	0601226	0.0022μF 50V M.C.	1,2C.1,2B
C79, 80	0601277	0.027μF 50V M.C.	2 C . 1 B
C83, 84	0512100	10μF 16V E.C.	2 C . 2 B
C85, 86	0600477	0.047μF 50V M.C.	2 D . 2B, C
C87, 88	0512100	10μF 16V E.C.	3 D . 3 B
C89, 90	0600337	0.033μF 50V M.C.	3 C . 3 B
C91, 92	0600187	0.018μF 50V M.C.	3 C . 3 B
C93, 94	0513479	4.7μF 25V E.C.	3 C . 3 B
C95, 96	0519103	0.47μF 50V E.C.	3 C . 3 B
C97, 98	0600188	0.18μF 50V M.C.	3C,D. 3B
C99, 100	0600397	0.039μF 50V M.C.	3 C . 3 B
C101, 102	0600187	0.018μF 50V M.C.	3 C . 3 B
C103, 104	0573228	0.22μF 35WV T.C.	3 C . 3 B
C105, 106	0515109	1μF 50V E.C.	3 C . 3 B
C107, 108	0519103	0.47μF 50V E.C.	3 D . 3 B
C109, 110	0573688	0.68μF 35WV T.C.	3 D . 3 B
C111, 112	0601336	0.0033μF 50V M.C.	2 C . 2 B
C601	0512100	10μF 16V E.C.	2 B
C602	0513101	100μF 25V E.C.	3 C
C603	0512100	10μF 16V E.C.	2 C
C604	0513479	4.7μF 25V E.C.	1 C
C605	0515339	3.3μF 50V E.C.	2 C
C606	0519102	3.3μF 50V E.C.	2 C
C501	0657223	22000 pF 50V C.C.	
R01, 02	0107152	1.5kΩ ¼W C.R.	1,2A.2,3A
R03, 04	0107154	150kΩ ¼W C.R.	1,2A.2,3A
R05, 06	0107104	100kΩ ¼W C.R.	1 A . 3 A
R07, 08	0107391	390Ω ¼W C.R.	1 A . 3 A
R09, 10	0107394	390kΩ ¼W C.R.	1 B . 3 A
R11, 12	0107330	33Ω ¼W C.R.	1 A . 3 A
R13, 14	0107154	150kΩ ¼W C.R.	1 A . 3 A
R15, 16	0107123	12kΩ ¼W C.R.	1 A . 3 A
R17, 18	0107104	100kΩ ¼W C.R.	2 A . 2,3A
R19, 20	0107221	220Ω ¼W C.R.	2 A
R21, 22	0107681	680Ω ¼W C.R.	2 A
R25, 26	0113104	100kΩ ¼W S.R.	1 D . 1 B
R27, 28	0113334	330kΩ ¼W S.R.	1 D . 1 C
R29, 30	0113184	180kΩ ¼W S.R.	1 D . 1 C
R31, 32	0113101	100Ω ¼W S.R.	1 D . 1 B
R33, 34	0113392	3.9kΩ ¼W S.R.	1 D . 1 B
R35, 36	0113472	4.7kΩ ¼W S.R.	1 D . 1 B
R37, 38	0113103	10kΩ ¼W S.R.	2 D . 2B,C
R39, 40	0113563	56kΩ ¼W S.R.	2 D . 2B,C
R41, 42	0113563	56kΩ ¼W S.R.	2 D . 2B,C
R43, 44	0113183	18kΩ ¼W S.R.	2 D . 2 C
R45, 46	0113221	220Ω ¼W S.R.	1 D . 1 B
R47, 48	0113274	270kΩ ¼W S.R.	1 C . 1 B
R49, 50	0113123	12kΩ ¼W S.R.	1 C . 1 B
R51, 52	0113272	2.7kΩ ¼W S.R.	1 C . 1 B
R53, 54	0113392	3.9kΩ ¼W S.R.	1 C . 1 B
R55, 56	0113101	100Ω ¼W S.R.	1 C . 1 B
R57, 58	0113272	2.7kΩ ¼W S.R.	1,2D. 1,2B
R59, 60	0113103	10kΩ ¼W S.R.	2C,D. 2 B
R61, 62	0113103	10kΩ ¼W S.R.	2C,D. 2 B
R63, 64	0113561	560Ω ¼W S.R.	1,2C.1,2B
R65, 66	0113154	150kΩ ¼W S.R.	2 C . 2 B
R67, 68	0113272	2.7kΩ ¼W S.R.	2,3D. 2,3B
R69, 70	0113331	330Ω ¼W S.R.	3 D . 3B,C
R71, 72	0113222	2.2kΩ ¼W S.R.	3 D . 3B,C
R73, 74	0113823	82kΩ ¼W S.R.	2 D . 2B,C
R75, 76	0113153	15kΩ ¼W S.R.	2,3D.2B,C
R77, 78	0113123	12kΩ ¼W S.R.	3 B , C
R79, 80	0113563	56kΩ ¼W S.R.	2 D . 2B,C
R81, 82	0113473	47kΩ ¼W S.R.	2 D . 2B,C
R83, 84	0113473	47kΩ ¼W S.R.	1 D . 2B,C
R85, 86	0113479	4.7Ω ¼W S.R.	2 D . 2 B
R87, 88	0113473	47kΩ ¼W S.R.	1 D . 1 B
R89, 90	0113473	47kΩ ¼W S.R.	1 D . 1 B
R91, 92	0113103	10kΩ ¼W S.R.	1,2C. 1 B
R93, 94	0113273	27kΩ ¼W S.R.	2 C . 1, 2B
R95, 96	0113153	15kΩ ¼W S.R.	2 C . 1, 2B
R97, 98	0113393	39kΩ ¼W S.R.	2 C . 2 B
R99, 100	0113122	1.2kΩ ¼W S.R.	2,3C. 2 B
R101, 102	0113561	560Ω ¼W S.R.	2,3. C2 B
R103, 104	0113563	56kΩ ¼W S.R.	3 D . 3 B
R105, 106	0113563	56kΩ ¼W S.R.	3 D . 3 B
R107, 108	0113153	15kΩ ¼W S.R.	3 D . 3 B
R109, 110	0113332	3.3kΩ ¼W S.R.	3 C . 2, 3B
R111, 112	0113152	1.5kΩ ¼W S.R.	3 D . 3 C
R113, 114	0113103	10kΩ ¼W S.R.	3 C . 3 B
R115, 116	0113103	10kΩ ¼W S.R.	3C,D. 3 B
R117, 118	0113331	330Ω ¼W S.R.	3 D . 3 B
R119, 120	0113392	3.9kΩ ¼W S.R.	3 D . 3 B
R121, 122	0113182	1.8kΩ ¼W S.R.	3 C . 3 B
R123, 124	0113272	2.7kΩ ¼W S.R.	3 C . 3 B
R125, 126	0113821	820Ω ¼W S.R.	3C,D. 3 B
R127, 128	0113823	82kΩ ¼W S.R.	3 D . 3 B
R129, 130	0113821	820Ω ¼W S.R.	3 D . 3 B
R131, 132	0113273	27kΩ ¼W S.R.	2,3C.2,3B
R133, 134	0113822	8.2kΩ ¼W S.R.	2,3C.2,3B
R135, 136	0113103	10kΩ ¼W S.R.	1 D . 1 B
R601	0182151	150Ω 2W Ce.R.	2, 3 C
R602	0113393	39kΩ ¼W S.R.	1, 2 C
R603	0113822	8.2kΩ ¼W S.R.	1 C
R604	0113824	820kΩ ¼W S.R.	1 C
R605	0113472	4.7kΩ ¼W S.R.	1 C
R606	0113222	2.2kΩ ¼W S.R.	2 C
R607	0113224	220kΩ ¼W S.R.	1 C
R608	0113822	8.2kΩ ¼W S.R.	1, 2 C
R609	0113479	4.7Ω ¼W S.R.	2 C
L01, 02	4900220	3-306379 100mH Inductor	3 D . 3 B
LF01, 02	4910340	DC-13Q Ceramic Filter	
LF03, 04	0910340	DC-13Q Ceramic Filter	
VR01, 02	1035130	10kΩ(B) Semi-Variable Resistor	2C,D. 2 B
VR03, 04	1035100	3.3kΩ(B) Semi-Variable Resistor	2 D . 2 C
	2410570	3020-5A 5P (5P D Type) Pin Ass'y	
	2410580	3020-3A 3P (3P D Type) Pin Ass'y	
	2410590	3020-4A 4P (4P D Type) Pin Ass'y	
	2410720	2461-4C 4P (4P A Type) Pin Ass'y	

4-16. F-1472 Equalizer Circuit Board (Stock No. 7550750 Complete Circuit Board.... QRX-5500A)

Conductor Side

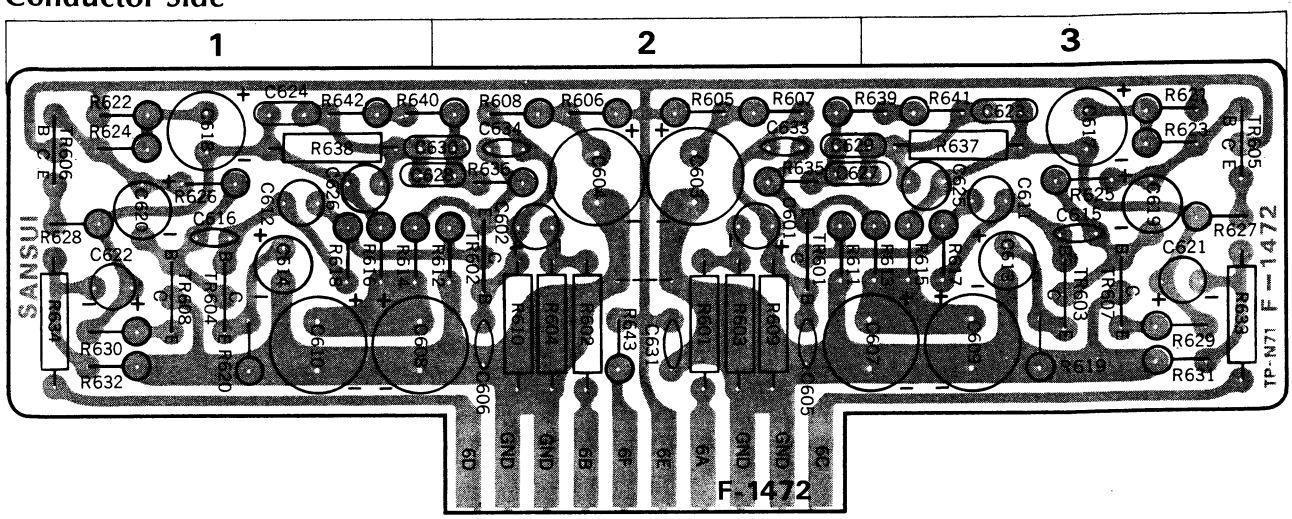

Parts List

Parts No.	Stock No.	Description				Position
TR601	0300470, 1	2SA726 Ⓦ(F, G)			Transistor	2
TR602	0300470, 1	2SA726 Ⓦ(F, G)				2
TR603	0305766, 7 or 0306071, 2	2SC632AⓌ (71, 81) or 2SC1313Ⓡ (G, H)				3
TR604	0305766, 7 or 0306071, 2	2SC632AⓌ (71, 81) or 2SC1313Ⓡ (G, H)				1
TR605	0306141, 2	2SC1362 (71, 81)				3
TR606	0306141, 2	2SC1362 (71, 81)				1
TR607	0300680, 1	2SA733② (P, Q)				3
TR608	0300680, 1	2SA733② (P, Q)				1
C601	0573229	2.2μF		25V	T.C.	2
C602	0573229	2.2μF				2
C603	0513330	33μF		25V	E.C.	2
C604	0513330	33μF				2
C605	0660330	33pF		50V	C.C.	2
C606	0660330	33pF				2
C607	0512101	100μF		16V	E.C.	2, 3
C608	0512101	100μF				1, 2
C609	0513470	47μF		25V	E.C.	3
C610	0513470	47μF				1
C611	0620681	680pF	± 5 %	50V	P.C.	3
C612	0620681	680pF				1
C613	0511330	33μF		10V	E.C.	3
C614	0511330	33μF				1
C615	0660220	22pF	±10%	50V	C.C.	3
C616	0660220	22pF				1
C617	0515100	10μF		50V	E.C.	3
C618	0515100	10μF				1
C619	0511330	33μF		10V	E.C.	3
C620	0511330	33μF				1
C621	0519101	1μF		50V	E.C.	3
C622	0519101	1μF				1
C623	0600226	0.0022μF	± 5 %	50V	M.C.	3
C624	0600226	0.0022μF				1
C625	0620821	820pF	± 5 %	50V	P.C.	3
C626	0620821	820pF				1
C627	0600107	0.01μF		50V	C.C.	
C628	0600107	0.01μF				
C631	0657223	0.022μF				2
R601	0107222	2.2kΩ	± 5 %	¼W	C.R.	2
R602	0107222	2.2kΩ				2

Parts No.	Stock No.	Description				position
R603	0107683	68kΩ	± 5 %	¼W	C.R.	2
R604	0107683	68kΩ				2
R605	0106474	470kΩ	± 5 %	¼W	C.R. (E.L.R.)	2
R606	0106474	470kΩ				2
R607	0106334	330kΩ				2
R608	0106334	330kΩ				2
R609	0107394	390kΩ	± 5 %	¼W	C.R.	2
R610	0107394	390kΩ				2
R611	0106123	12kΩ	± 5 %	¼W	C.R. (E.L.R.)	2
R612	0106123	12kΩ				2
R613	0106821	820Ω				3
R614	0106821	820Ω				1
R615	0106334	330kΩ				3
R616	0106334	330kΩ	± 5 %	¼W	C.R. (E.L.R.)	1
R617	0106122	1.2kΩ				3
R618	0106122	1.2kΩ				1
R619	0106222	2.2kΩ				3
R620	0106222	2.2kΩ				1
R621	0106103	10kΩ				3
R622	0106103	10kΩ				1
R623	0106473	47kΩ				3
R624	0106473	47kΩ				1
R625	0106332	3.3kΩ				3
R626	0106332	3.3kΩ				1
R627	0106680	68Ω				3
R628	0106680	68Ω				1
R629	0106680	68Ω				3
R630	0106680	68Ω				1
R631	0106104	100kΩ				3
R632	0106104	100kΩ				1
R633	0107681	680Ω	± 5 %	¼W	C.R.	3
R634	0107681	680Ω				1
R635	0106101	100Ω	± 5 %	¼W	C.R. (E.L.R.)	2
R636	0106101	100Ω				2
R637	0107273	27kΩ	± 5 %	¼W	C.R.	3
R638	0107273	27kΩ				1
R639	0106274	270kΩ	± 5 %	¼W	C.R. (E.L.R.)	2, 3
R640	0106274	270kΩ				1, 2
R641	0106393	39kΩ				3
R642	0106393	39kΩ				1
R901	0107184	180kΩ	± 5 %	¼W	C.R.	
R902	0107184	180kΩ				

4-17. F-1486 Filter Circuit Board

(Stock No. 7593210 Complete Circuit Board....QRX-5500A)
(Stock No. 7593300 Complete Circuit Board....QRX-7500A)

Conductor Side

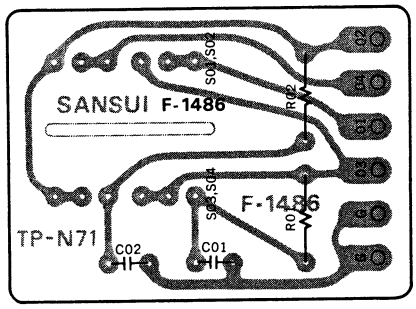

Parts List

Parts No.	Stock No.	Description
C01	0600187	0.018μF ± 5 % 50V M.C.
C02	0600187	0.018μF
R01	0107824	820kΩ ± 5 % ¼W C.R.
R02	0107824	820kΩ
S01~04	1130760	Push Switch

5-18. F-1490 De-emphasis Circuit Board

(Stock No. 7593240 Complete Circuit Board....QRX-5500A)
(Stock No. 7593280 Complete Circuit Board....QRX-7500A)

Conductor side

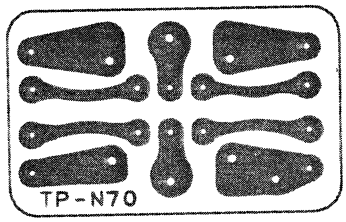

Parts List

Parts No.	Stock No.	Description
C01	0600686	0.0068μF ± 5 % 50V M.C.
C02	0600686	0.0068μF
S01, 02	1110240	Slide Switch

5-19. Figures

Transistor & IC

SEMICONDUCTORS	COMPLETE CIRCUIT BOARD
2SC1364 2SC1047 2SC945 2SC1362 2SA733 2SC1222 2SC1362 2SA640	F-1515 F-1517 F-1483 F-2589 F-1472 F-1514 F-1485 F-2084 F-1484
2SC403 2SC632A	F-1517 F-1472
2SC710 2SC738 2SC711 2SA697 2SC1312 2SC1313 2SA726 2SC1211	F-1517 F-2084 F-2589 F-1485 F-1484 F-1483 F-1472
2SC930	F-1517
2SC875	F-1514
2SD313	F-1483
2SC1124 2SA706	F-1514

SEMICONDUCTORS	COMPLETE CIRCUIT BOARD
2SD315 2SC1030 2SC1111 2SA756 2SA744	F-1515 F-1514
2SA562 2SC1000 2SA393	F-1517 F-1484
2SC983	F-1514 F-1515
BA-312	F-2589
μPC555H	F-1517
μPC554C	F-1517
HA1327 CD4-392	F-2084 F-2589

Diode

SEMICONDUCTORS	COMPLETE CIRCUIT BOARD
1N34A 1N60	F-1515 F-1485 F-1517
10D-1	F-1515 F-2048
DS-430	F-1514 F-1517
SR1FM-2 SR3AM-4 SR3AM-6 SR3AM-8 SR3AM-10 SR3AM-12 EQB01-18 1S1588 EQB01-13 1S2473 10D-1	F-2084 F-1514 F-2589 F-2048 F-1515 F-1483

SEMICONDUCTORS	COMPLETE CIRCUIT BOARD
2B2DM	F-1515 F-1483
1S1007	F-1517
1S953	F-1517
RD-12E RD-19A	F-2589 F-1515 F-1514

Abbreviations

C.R.	Carbon Resistor	BP.E.C.	Bi-Polar Electrolytic Capacitor
S.R.	Solid Resistor	C.C.	Ceramic Capacitor
Ce.R.	Cement Resistor	Mi.C.	Mica Capacitor
M.R.	Metallized Film Resistor	O.C.	Oil Capacitor
M.C.	Mylar Capacitor	P.C.	Polystyrene Capacitor
E.C.	Electrolytic Capacitor	T.C.	Tantalum Capacitor

5. THREADING OF DIAL CORD

* If dial cord cut off is or slips, replace cord by following procedures. As QRX-5500A, QRX-7500A is using 0.6 mmϕ cord, please replace it with same type certainly.

* Length of dial cord.....approx. 210cm (82.7 inch)

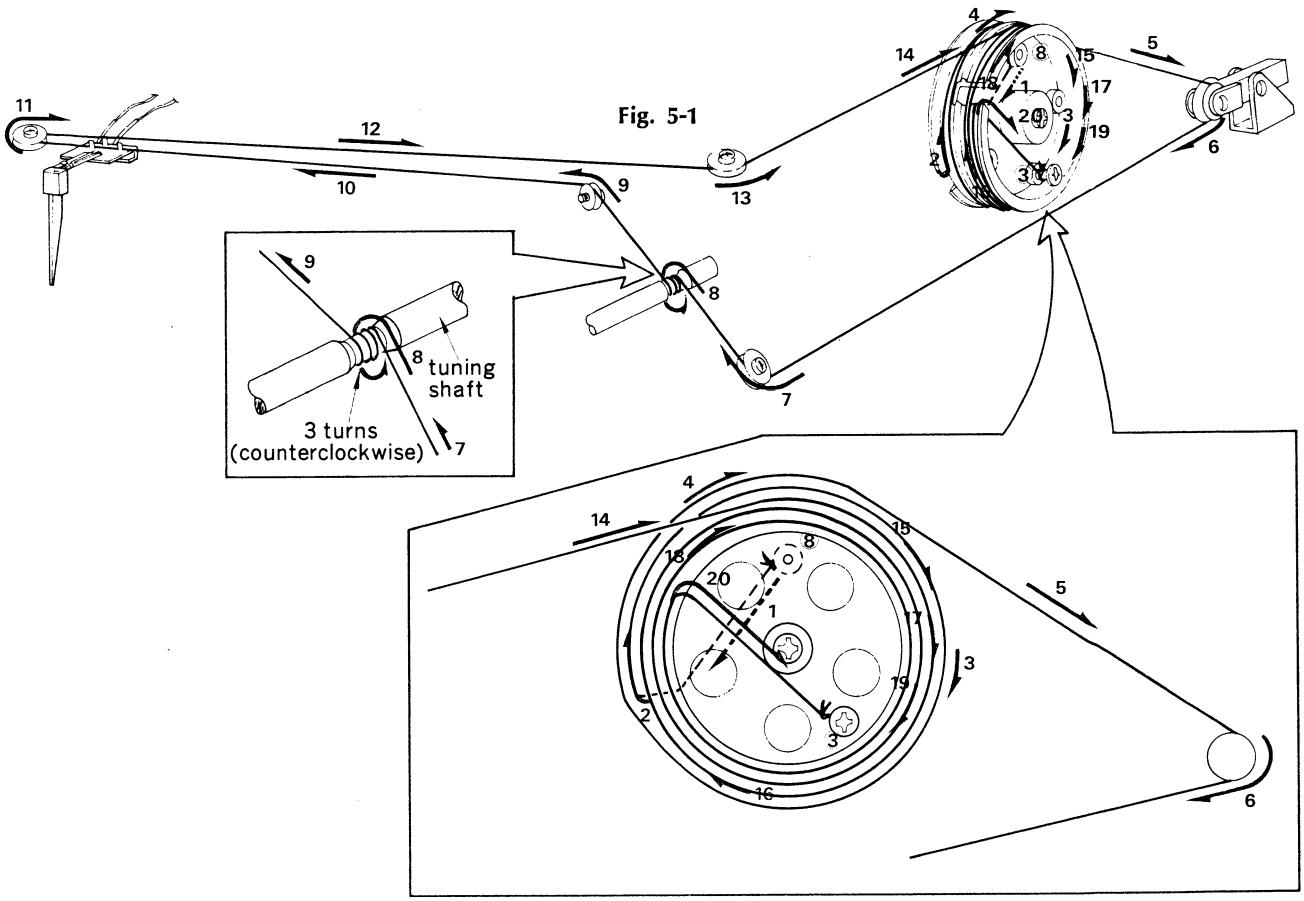

1. How to Thread Dial Cord

* Thread dial cord in numerical order from 1 to 20 as shown in Fig. 4-1.

1) Close the variable capaitor completely (Maximum capacitance).
2) Tie cord to number ⑧ screw of the dial pulley and thread cord in direction of arrow from 1 to 7 toward tuning shaft 8.
3) After 8, wind cord three turns around the tuning shaft counterclockwise and thread it in direction of arrow from 9 to 19.
4) After 20, tie cord to number ③ screw of the pulley.

* In order to proceed with the above procedure 4) successfully, please follow the instruction undermentioned.

(1) To strengthen the dial cord's tension, hold around the end of cord and pull it toward the Front Panel.
(2) Then, turn the tuning shaft counterclockwise, as cord's tension will be more constantly obtained.
(3) Tie the cord to number ③ screw of the pulley (same as procedure 4).

5) After these procedures, lock the knots of cord with paint.

2. Attachment of Dial Pointer

1) Close the variable capacitor completely (Maximum capacitance).
2) Set the dial pointer to "0" on dial scale and tighten the dial pointer ass'y. (See Fig. 4-2)

Fig. 5-2

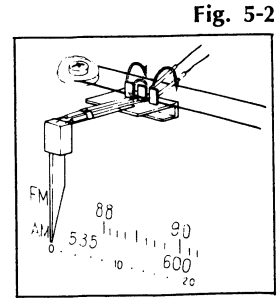

* Make sure that the dial mechanism operates smoothly by turning the Tuning knob.

Stock No.	Description
6036050	Dial Cord 0.6mmϕ

6-1. Other Parts (Top Side)/QRX-5500A

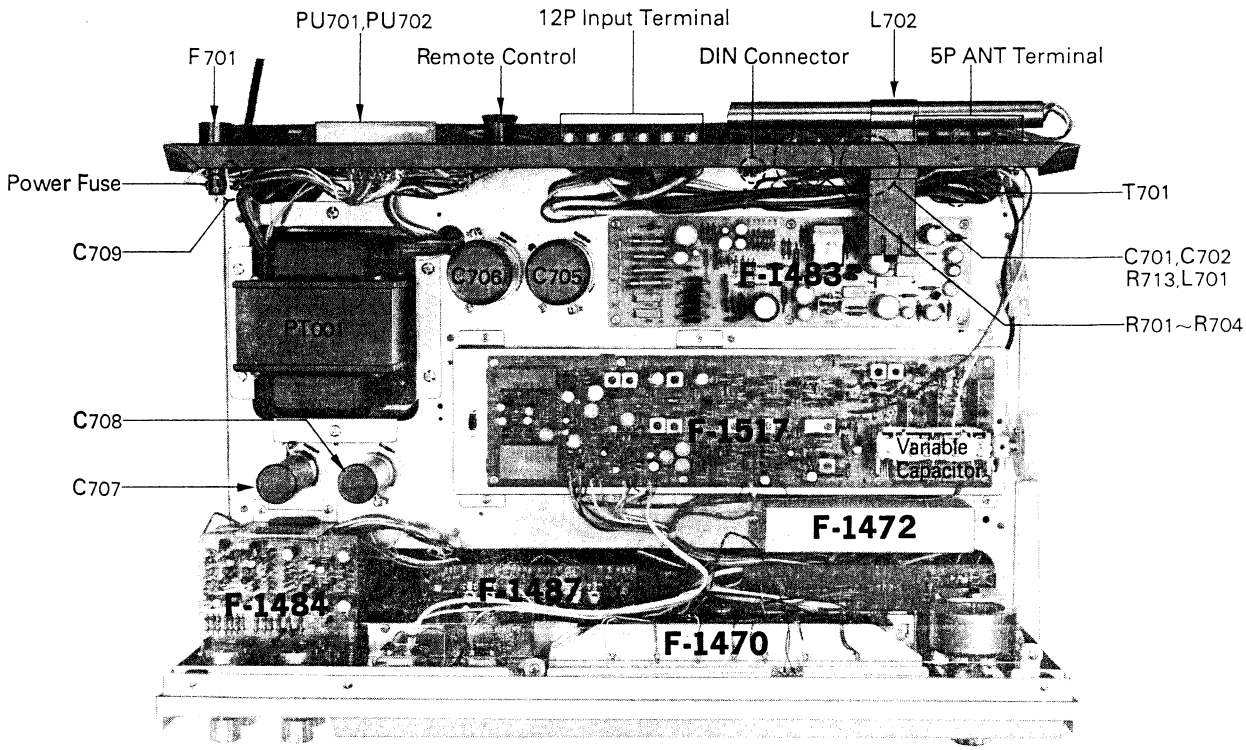

Parts List

Parts No.	Stock No.	Description
C701	0657473	0.047μF 50V C.C.
C702	0657473	0.047μF 50V C.C.
C705	0559107	10000μF 35V E.C.
C706	0559107	10000μF 35V E.C.
C707	0559501	1000μF 63V E.C.
C708	0559501	1000μF 63V E.C.
C709	0605477	0.047μF 250V M.C.
R701	0107104	100kΩ ±5% ¼W C.R.
R702	0107184	180kΩ ±5% ¼W C.R.
R703	0107184	180kΩ ±5% ¼W C.R.
R704	0107104	100kΩ ±5% ¼W C.R.
R713	0111221	220Ω ½W S.R.
R714	0150331	330Ω 10W Ce.R.
L701	4290030	1μH Coil
L702	4200550	Bar Antenna Coil
T701	4290021	75Ω : 300Ω FM Balun
F701	2300060	Fuse Holder
	0431290, 2	6A Power Fuse (100V, 117V)
	0431310	3.5A Power Fuse (220, 240V)

Parts No.	Stock No.	Description
PU701	2410090	Voltage Selector, plug
PU702	2410080	Voltage Selector, socket
PT001	4001360	Power Transformer
	2430040	DIN Connector
	2010020	9P Remote Control Socket
	2410540	9P Remote Control Dummy Plug
	2290170	5P Antenna Terminal
	2200360	12P Input Terminal

6-2. Other Parts (Bottom Side)/QRX-5500A

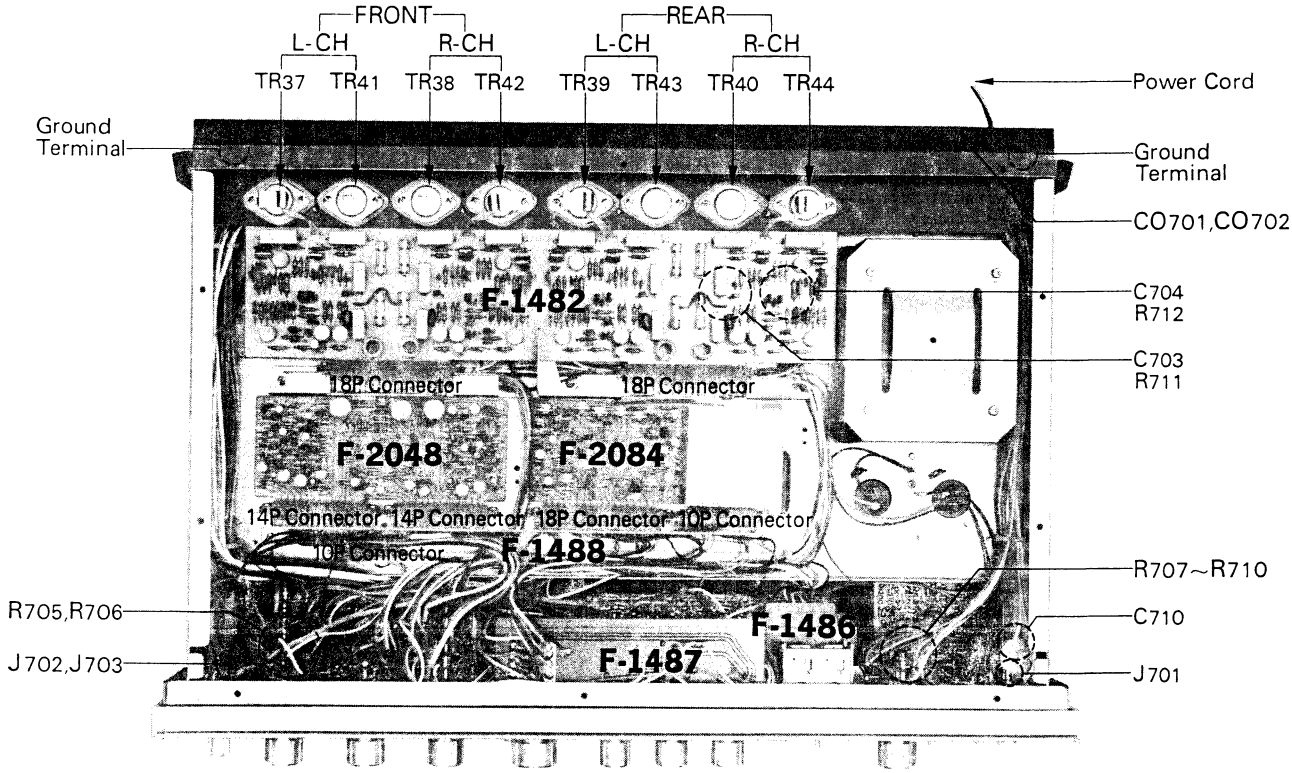

Parts List

Parts No.	Stock No.	Description	
TR37	0305631	2SC1030 (B)	Transistor
TR38	0305631	2SC1030 (B)	
TR39	0305631	2SC1030 (B)	
TR40	0305631	2SC1030 (B)	
TR41	0300551	2SA756 (B)	
TR42	0300551	2SA756 (B)	
TR43	0300551	2SA756 (B)	
TR44	0300551	2SA756 (B)	
C703	0655103	0.01μF 500V C.C.	
C704	0655103	0.01μF 500V C.C.	
C710	0659801	0.01μF 1.4kV C.C.	
R705	0107473	47kΩ ± 5% ¼W C.R.	
R706	0107473	47kΩ ± 5% ¼W C.R.	
R707	0202331	330Ω 2W M.R.	
R708	0202331	330Ω 2W M.R.	
R709	0202331	330Ω 2W M.R.	
R710	0202331	330Ω 2W M.R.	
R711	0202562	5.6kΩ 2W M.R.	
R712	0202562	5.6kΩ 2W M.R.	

Parts No.	Stock No.	Description
CO701, 702	2450040	AC outlet
J701	2430170	Microphone Jack
J702	2430200	Headphone Jack
J703	2430200	Headphone Jack
	3800261	KP-205 Power Cord
	2420030	10P Connector
	2420150	14P Connector
	2420020	18P Connector
	2230050	Ground Terminal

6-3. Other Parts (Front Side)/QRX-5500A

Parts List

Parts No.	Stock No.	Description
1	5101173	Binding Head Screw, M4×45
2	5186110	Plain Washer, 4φ
3	5101173	Binding Head Screw, M4×45
4	5186110	Plain Washer, 4φ
5	5101173	Binding Head Screw, M4×45
6	5186110	Plain Washer, 4φ
7	5101173	Binding Head Screw, M4×45
8	5186110	Plain Washer, 4φ
9	5104571	Hexagon Head Bolts, M4×23
10	5121360	Spring Washer, 4φ
11	5186091	Nail Washer
12	5104571	Hexagon Head Bolts, M4×23
13	5121360	Spring Washer, 4φ
14	5186091	Nail Washer
15	5726823	Wood Case
16	5317671	WO-1 Type Knob, BASS volume
17	5317682	WI-1 Type Knob, BASS volume
18	5317671	WO-1 Type Knob, BASS volume
19	5317682	WI-1 Type Knob, BASS volume
20	5317671	WO-1 Type Knob, TREBLE volume
21	5317682	WI-1 Type Knob, TREBLE volume
22	5317671	WO-1 Type Knob, TREBLE volume
23	5317682	WI-1 Type Knob, TREBLE volume
24	5176052	Jack Nut
25	5176052	Jack Nut
26	5317642	M-2 Type Knob, SPEAKER switch
27		Hex. Nut, M9
28		Plain Washer, 9φ
29	5317652	S-2 Type Knob, BALANCE volume
30	5317652	S-2 Type Knob, BALANCE volume
31	5317652	S-2 Type Knob, BALANCE volume
32		Hex. Nut, M9
33		Plain Washer, 9φ
34	5317811	P-5 Type Knob, LEVEL SET volume
35	5317632	L-2 Type Knob, VOLUME
36	5317642	M-2 Type Knob, FUNCTION switch
37	5317642	M-2 Type Knob, DIRECTION switch
38	5317642	M-2 Type Knob, SELECTOR switch
39	5106061	Hex. Socket Setscrew, M4×6
40	5317780	N-5 Type Knob, TUNING
41		Hex. Nut, M9
42		Plain Washer, 9φ
43	5317811	P-5 Type Knob, MIC. MIXING LEVEL volume
44	5101043	Binding Head Screw, M3×6
45	5101043	Binding Head Screw, M3×6
46	5101043	Binding Head Screw, M3×6
47	5101042	Binding Head Screw, M3×5
48	5120141	Plain Washer, 3φ
49	5101042	Binding Head Screw, M3×5
50	5120141	Plain Washer, 3φ
51	5101042	Binding Head Screw, M3×5
52	5120141	Plain Washer, 3φ
53	5101042	Binding Head Screw, M3×5
54	5120141	Plain Washer, 3φ
55	5101042	Binding Head Screw, M3×5
56	5120141	Plain Washer, 3φ
57	5101042	Bindind Head Screw, M3×5
58	5120141	Plain Washer, 3φ
59	5101042	Binding Head Screw, M3×5
60	5120141	Plain Washer, 3φ

Parts No.	Stock No.	Description
61	5308891	Smoked Plate Frame
	5047680	Smoked Plate
62	7007180	Front Panel
63	7106083	Push Button. POWER switch
64	6906031	Spring, POWER switch
65		Hex. Nut, M11
66		Plain Washer, 11φ
67	1020240, 1	100kΩ (B)×2 BASS Volume
68		Hex. Nut, M11
69		Plain Washer, 11φ
70	1020240, 1	100kΩ (B)×2 BASS Volume
71		Hex. Nut, M11
72		Plain Washer, 11φ
73	1020250, 1	100kΩ (W)×2 TREBLE Volume
74		Hex. Nut, M11
75		Plain Washer, 11φ
76	1020250, 1	100kΩ (W)×2 TREBLE Volume
77	1130350	Push Switch, POWER switch
78		Hex. Nut, M9
79		Plain Washer, 9φ
80		Hex. Nut, M9
81		Plain Washer, 9φ
82	2430200	Headphone Jack
83	5236491	Spacer Nut, M9
84	1102500, 1	Rotary Switch Y-224, 244, SPEAKER switch
85	5326380	Push Button, LOW & HIGH FILTER switch
86	1130760	Push Switch (2 Stage)
87	1130760	Push Switch (2 Stage)
88		Hex. Nut, M8
89		Plain Washer, 8φ
90	1010400, 1	250kΩ (HB) BALANCE Volume
91		Hex. Nut, M8
92		Plain Washer, 8φ
93	1060250, 1	250kΩ (HB)×4 BALANCE Volume
94	5236461	Spacer Nut, M8
95	1010400, 1	250kΩ (HB) BALANCE Volume
96		Hex. Nut, M8
97		Plain Washer, 8φ
98	1060260, 1	250kΩ (B)×4 LEVEL SET Volu me
99		Hex. Nut, M9
100		Plain Washer, 9φ
101	1060240, 1	250kΩ (B)×4 VOLUME
102		Hex. Nut, M9
103		Plain Washer, 9φ
104	1106120	Rotary Switch Y-6217, FUNCTION switch
105	5326380	Push Button, accessory switch
106	1130750	Push Switch (5 Srage)
107	5236491	Spacer Nut, M9
108	1102510	Rotary Switch Y-244, DIRECTION switch
109		Hex. Nut, M9
110		Plain Washer, 9φ
111	1107020	Rotary Switch Y-7177, SELECTOR switch
112		Hex. Nut, M7
113		Plain Washer, 7φ
114	1060280	250kΩ (B)×2, 50kΩ (B)×2 MIC, MIXING LEVEL Volume
115		Hex. Nut, M12
116		Plain Washer, 12φ
117	2430170	Microphone Jack
118	7036361	Tuning Ass'y

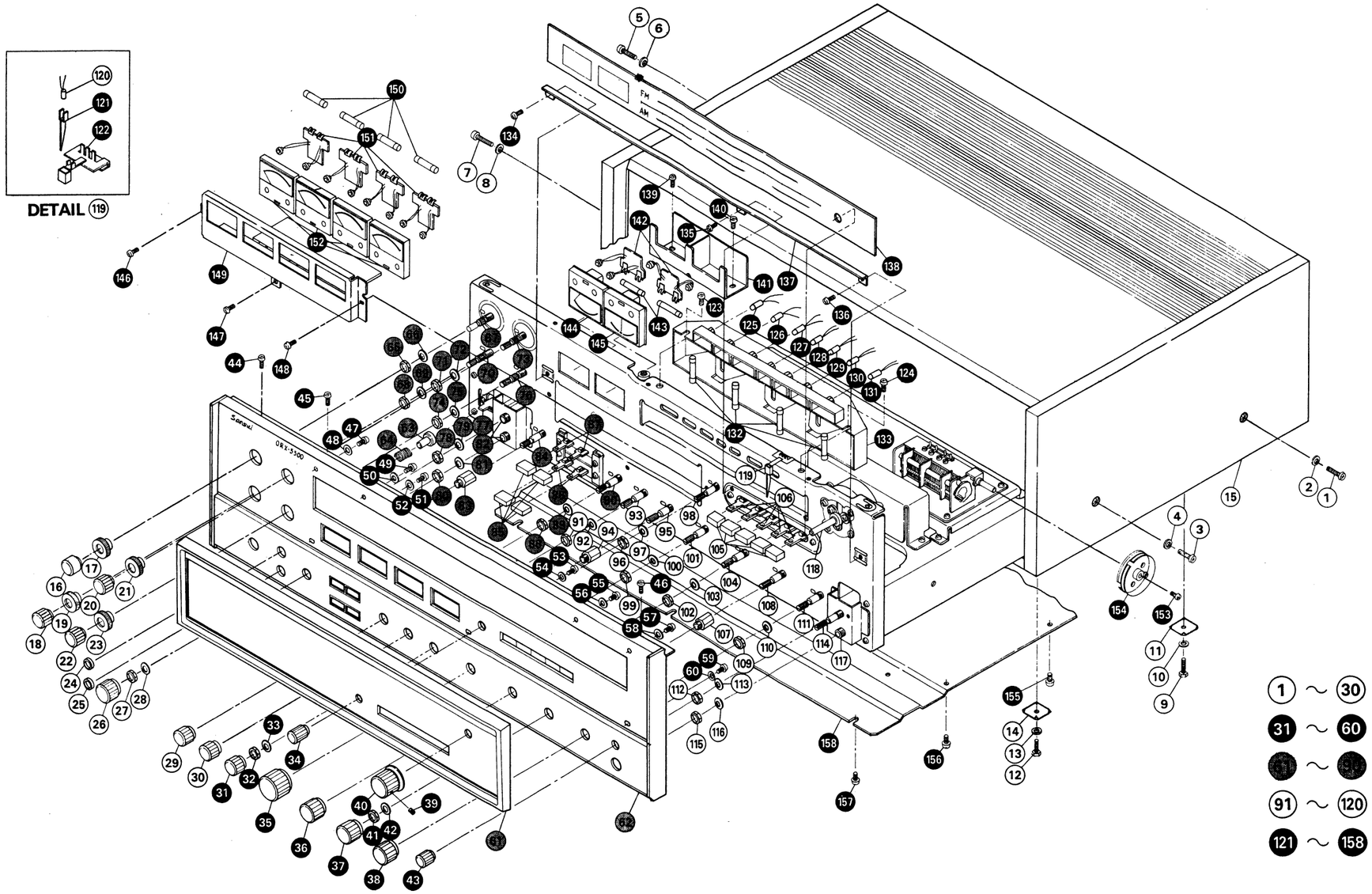

Parts No.	Stock No.	Description
119		Dial Pointer Ass'y
120	0400200	Pilot Lamp, lead type (6.3V 75mA)
121	5416300	Dial Pointer
122	5416300	Holder, dial pointer
123	5109122	Binding Head Tapping Screw, M3×8
124	5109122	Binding Head Tapping Screw, M3×8
125	0400300	Lead Type Lamp (7V 100mA), STEREO indicator
126	0400310	Lead Type Lamp (7V 100mA), PHONO-2 indicator
127	0400330	Lead Type Lamp (7V 100mA), PHONO-1 indicator

Parts No.	Stock No.	Description
128	0400300	Lead Type Lamp (7V 100mA), FM indicator
129	0400290	Lead Type Lamp (7V 100mA), AM indicator
130	0400320	Lead Type Lamp (7V 100mA), AUX-1 indicator
131	0400310	Lead Type Lamp (7V 100mA), AUX-2 indicator
132	0420040	Fuse Type Lamp (7V 300mA)
133	5066211	Indicator Box
134	5109122	Binding Head Tapping Screw, M3×8
135	5109122	Binding Head Tapping Screw, M3×8

Parts No.	Stock No.	Description
136	5109122	Binding Head Tapping Screw, M3×8
137	5269240	Stopper, dial scale
138	5407940	Dial Scale
139	5109122	Binding Head Tapping Screw, M3×8
140	5109122	Binding Head Tapping Screw, M3×8
141	5269250	Holder, tuning & signal meter
142	7726050	Meter Lamp Unit
143	0420040	Fuse Type Lamp (7V 300mA)
144	4300740	Signal Meter
145	4300750	Tuning Meter
146	5109122	Binding Head Tapping Screw, M3×8
147	5109122	Binding Head Tapping Screw, M3×8

Parts No.	Stock No.	Description
148	5109122	Binding Head Tapping Screw, M3×8
149	5269261	Holder, level meter
150	0420040	Fuse Type Lamp (7V 300mA)
151	7726050	Meter Lamp Unit
152	4300860	Level Meter
153	5101123	Binding Head Screw, M2,6×6
154	6146670	Dial Pulley
155	5101161	Binding Head Screw, M4×6
156	5101161	Binding Head Screw, M4×6
157	5101161	Binding Head Screw, M4×6
158	5058100	Bottom Plate

6-4. Other Parts (Front Side)/QRX-7500A

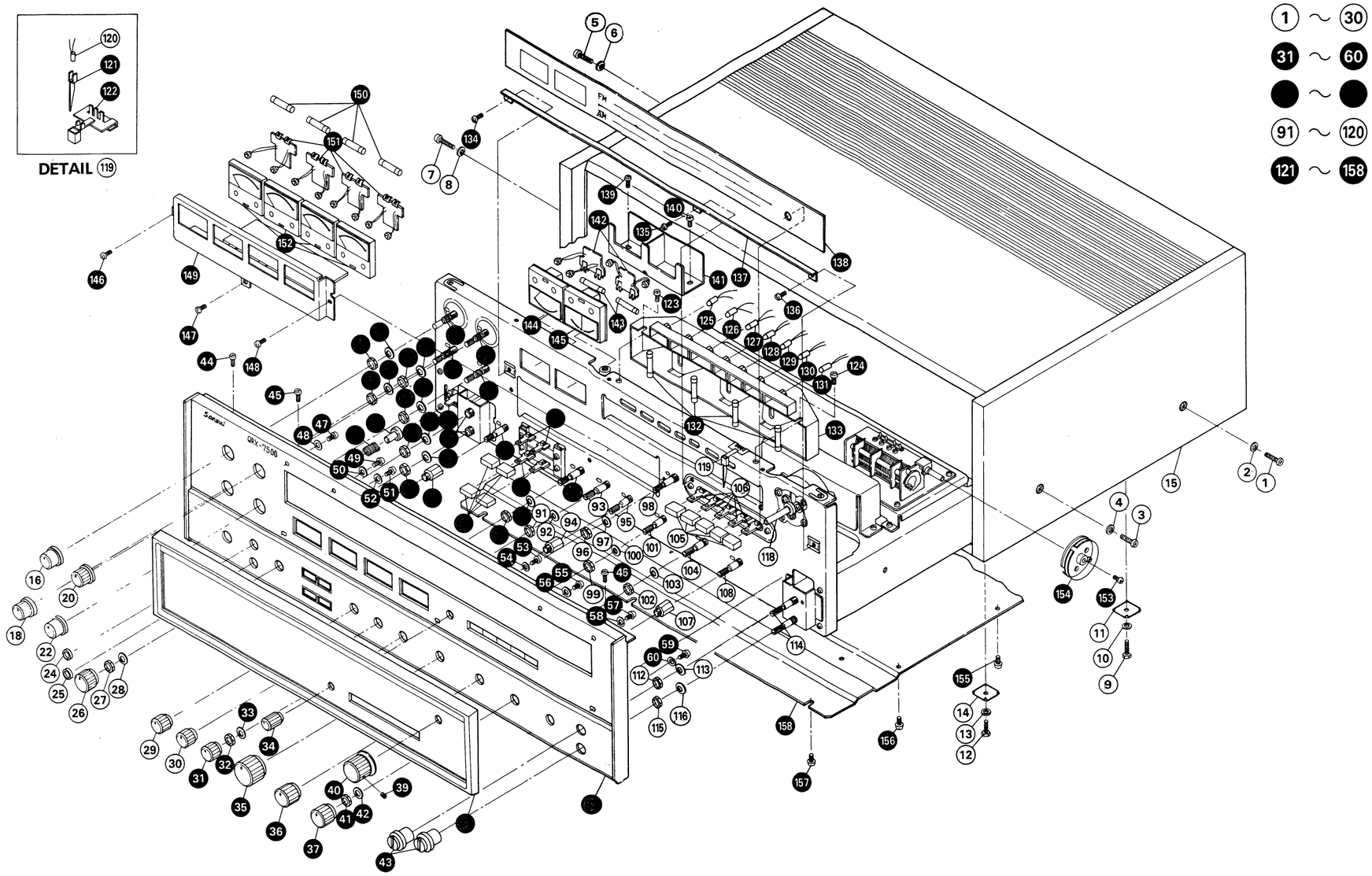

Parts List

Parts No.	Stock No.	Description
1	5101173	Binding Head Screw, M4 × 45
2	5186110	Plain Washer, 4φ
3	5101173	Binding Head Screw, M4 × 45
4	5186110	Plain Washer, 4φ
5	5101173	Binding Head Screw, M4 × 45
6	5186110	Plain Washer, 4φ
7	5101173	Binding Head Screw, M4 × 45

Parts No.	Stock No.	Description
8	5186110	Plain Washer, 4φ
9	5104571	Hexagon Head Bolts, M4 × 23
10	5121360	Spring Washer, 4φ
11	5186091	Nail Washer
12	5104571	Hexagon Head Bolts, M4 × 23
13	5121360	Spring Washer, 4φ
14	5186091	Nail Washer

Parts No.	Stock No.	Description
15	5726821	Wood Case
16	5317850	S-2-S Type Knob, BASS volume
18	5317850	S-2-S Type Knob, BASS volume
20	5317850	S-2-S Type Knob, TREBLE volume
22	5317850	S-2-S Type Knob, TREBLE volume
24	5176052	Jack Nut
25	5176052	Jack Nut

Parts No.	Stock No.	Description
26	5317642	M-2 Type Knob, SPEAKER switch
27		Hex. Nut, M9
28		Plain Washel, 9φ
29	5317652	S-2 Type Knob, BALANCE volume
30	5317652	S-2 Type Knob, BALANCE volume
31	5317652	S-2 Type Knob, BALANCE volume
32		Hex. Nut, M9

Parts No.	Stock No.	Description
33		Plain Washer, 9φ
34	5317811	P-5 Type Knob, LEVEL SET volume
35	5317632	L-2 Type Knob, VOLUME
36	5317642	M-2 Type Knob, FUNCTION switch
37	5317642	M-2 Type Knob, DIRECTION switch
39	5106061	Hex. Socket Setscrew, M4×6
40	5317780	N-5 Type Knob, TUNING
41		Hex. Nut, M9
42		Plain Washer, 9φ
43	5317860	Q-5 Type Knob, CD-4 SEPARATION Volume
44	5101043	Binding Head Screw, M3×6
45	5101043	Binding Head Screw, M3×6
46	5101043	Binding Head Screw, M3×6
47	5101042	Binding Head Screw, M3×5
48	5120141	Plain Washer, 3φ
49	5101042	Binding Head Screw, M3×5
50	5120141	Plain Washer, 3φ
51	5101042	Binding Head Screw, M3×5
52	5120141	Plain Washer, 3φ
53	5101042	Binding Head Screw, M3×5
54	5120141	Plain Washer, 3φ
55	5101042	Binding Head Screw, M3×5
56	5120141	Plain Washer, 3φ
57	5101042	Binding Head Screw, M3×5
58	5120141	Plain Washer, 3φ
59	5101042	Binding Head Screw, M3×5
60	5120141	Plain Washer, 3φ
61	5308891	Smoked Plate Frame
	5047680	Smoked Plate
62	7007190	Front Panel
63	7106083	Push Button, POWER switch
64	6906031	Spring, POWER switch
65		Hex. Nut, M11
66		Plain Washer, 11φ
67	1010980, 1	100kΩ (B)×2 BASS Volume
68		Hex. Nut, M11
69		Plain Washer, 11φ
70	1010980, 1	100kΩ (B)×2 BASS Volume
71		Hex. Nut, M11
72		Plain Washer, 11φ
73	1010990, 1	100kΩ (W)×2 TREBLE Volume
74		Hex. Nut, M11
75		Plain Washer, 11φ
76	1010990, 1	100kΩ (W)×2 TREBLE Volume
77	1130350	Push Switch, POWER switch
78		Hex. Nut, M9
79		Plain Washer, 9φ
80		Hex. Nut, M9
81		Plain Washer, 9φ
82	2430200	Headphone Jack
83	5236491	Spacer Nut, M9
84	1102500, 1	Rotary Switch Y-2-2-4, SPEAKER switch
85	5326380	Push Button, LOW & HIGH FILTER switch
86	1130760	Push Switch (2 Stage)
87	1130760	Push Switch (2 Stage)
88		Hex. Nut, M8
89		Plain Washer, 8φ
90	1010400, 1	250kΩ (HB) BALANCE Volume
91		Hex. Nut, M8
92		Plain Washer, 8φ
93	1060250, 1	250kΩ (HB)×4 BALANCE Volume
94	5236461	Spacer Nut, M8
95	1010400, 1	250 (HB) BALANCE Volume
96		Hex. Nut, M8

Parts No.	Stock No.	Description
97		Plain Washer, 8φ
98	1060260, 1	250kΩ (B)×4 LEVEL SET Volume
99		Hex. Nut, M9
100		Plain Washer, 9φ
101	1060240, 1	250kΩ (B)×4 VOLUME
102		Hex. Nut, M9
103		Plain Washer, 9φ
104	1106130	Rotary Switch Y-6-12-5, FUNCTION switch
105	5326380	Push Button, accessory switch
106	1130750	Push Switch (5 Stage)
107	5236491	Spacer Nut, M9
108	1105200	Rotary Switch Y-5-13-5, SELECTOR switch
112		Hex. Nut, M8
113		Plain Washer, 8φ
114	1005110, 1	50kΩ (B) SEPARATION Volume
115		Hex. Nut, M8
116		Plain Washer, 8φ
118	7036361	Tuning Ass'y
119		Dial Pointer Ass'y
120	0400200	Pilot Lamp, lead type (6.3V 75mA)
121	5416050	Dial Pointer
122	5416300	Holder, dial pointer
123	5109122	Binding Head Tapping Screw, M3×8
124	5109122	Binding Head Tapping Screw, M3×8
125	0400300	Lead Type Lamp (7V 100mA), STEREO indicator
126	0400310	Lead Type Lamp (7V 100mA), PHONO-2 indicator
127	0400330	Lead Type Lamp (7V 100mA), PHONO-1 indicator
128	0400300	Lead Type Lamp (7V 100mA), FM indicator
129	0400290	Lead Type Lamp (7V 100mA), AM indicator
130	0400320	Lead Type Lamp (7V 100mA), AUX indicator
131	0400400	Lead Type Lamp (6V 30mA), CD-4 indicator
132	0420040	Fuse Type Lamp (7V 300mA)
133	5066211	Indicator Box
134	5109122	Binding Head Tapping Screw, M3×8
135	5109122	Binding Head Tapping Screw, M3×8
136	5109122	Binding Head Tapping Screw, M3×8
137	5269240	Stopper, dial scale
138	5407950	Dial Scale
139	5109122	Binding Head Tapping Screw, M3×8
140	5109122	Binding Head Tapping Screw, M3×8
141	5269250	Holder, tuning & signal meter
142	7726050	Meter Lamp Unit
143	0420040	Fuse Type Lamp (7V 300mA)
144	4300740	Signal Meter
145	4300750	Tuning Meter
146	5109122	Binding Head Tapping Screw, M3×8
147	5109122	Binding Head Tapping Screw, M3×8
148	5109122	Binding Head Tapping Screw, M3×8
149	5269250	Holder, level meter
150	0420040	Fuse Type Lamp (7V 300mA)
151	7726060	Meter Lamp Unit
152	4300860	Level Meter
153	5101123	Binding Head Screw, M2, 6×6
154	6146670	Dial Pulley
155	5101161	Binding Head Screw, M4×6
156	5101161	Binding Head Screw, M4×6
157	5101161	Binding Head Screw, M4×6
158	5058100	Bottom Plate

6-5. Other Parts (Top Side)/QRX-7500A

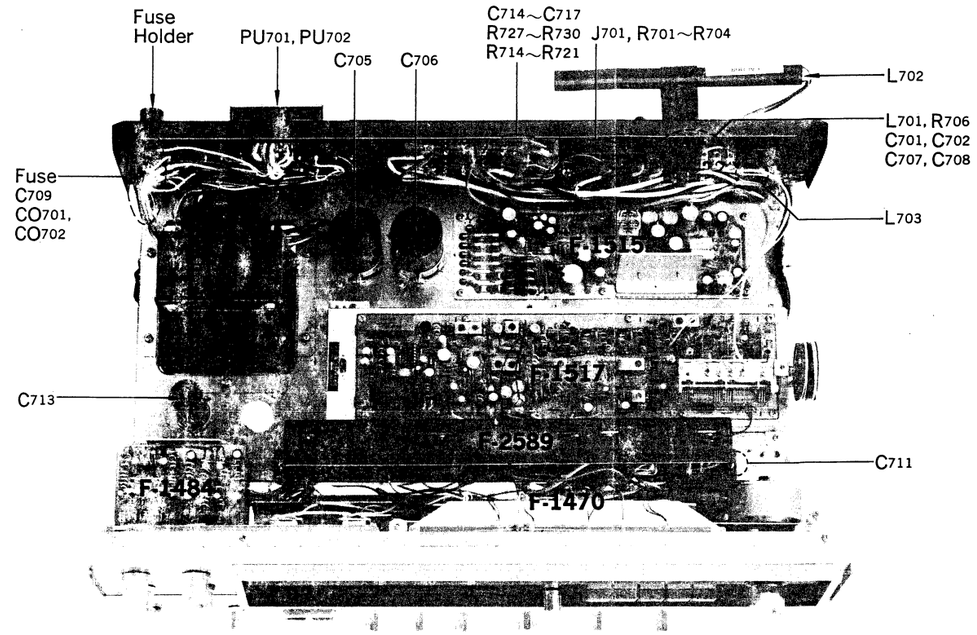

Parts List

Parts No.	Stock No.	Description
C701	0657473	0.047μF 50V C.C.
C702	0657473	0.047μF 50V C.C.
C705	0559107	10000μF 35V E.C.
C706	0559107	10000μF 35V E.C.
C707	0657473	0.047μF 50V C.C.
C708	0657473	0.047μF 50V C.C.
C709	0605477	0.047μF 250V M.C.
C711	0657473	0.047μF 50V C.C.
C712	0657473	0.047μF 50V C.C.
C713	0559501	1000μF 63V E.C.
C714	0657391	390 pF 50V C.C.
C715	0657391	390 pF 50V C.C.
C716	0657391	390 pF 50V C.C.
C717	0657391	390 pF 50V C.C.
R701	0107104	100kΩ ¼W C.R.
R702	0107184	180kΩ ¼W C.R.
R703	0107184	180kΩ ¼W C.R.
R704	0107104	100kΩ ¼W C.R.
R706	0111221	220Ω ½W S.R.
R714	0107332	3.3kΩ ¼W C.R.
R715	0107563	56kΩ ¼W C.R.
R716	0107332	3.3kΩ ¼W C.R.
R717	0107563	56kΩ ¼W C.R.
R718	0107332	3.3kΩ ¼W C.R.
R719	0107563	56kΩ ¼W C.R.

Parts No.	Stock No.	Description
R720	0107332	3.3kΩ ¼W C.R.
R721	0107563	56kΩ ¼W C.R.
R727	0107123	12kΩ ¼W C.R.
R728	0107123	12kΩ ¼W C.R.
R729	0107123	12kΩ ¼W C.R.
R730	0107123	12kΩ ¼W C.R.
	0431310	3.5A Power Fuse (220V~240V)
	0431290	6A Power Fuse (100V~117V)
	2300060	Fuse Holder
J701	2430040	DIN Connector
L701	4290030	1μH Coil
L702	4200550	Bar Antenna
	5266442	Bar Antenna Holder
	5287280	Bar Antenna Holder Case
L703	4290021	75Ω : 300Ω FM Balun
CO701	2450040	AC Outlet
CO702	2450040	AC Outlet
PT001	4002010	Power Transformer
PU701	2410091	Voltage Selector, Plug
PU702	2410830	Voltage Selector, Socket

6-6. Other Parts (Bottom Side)/ORX-7500A

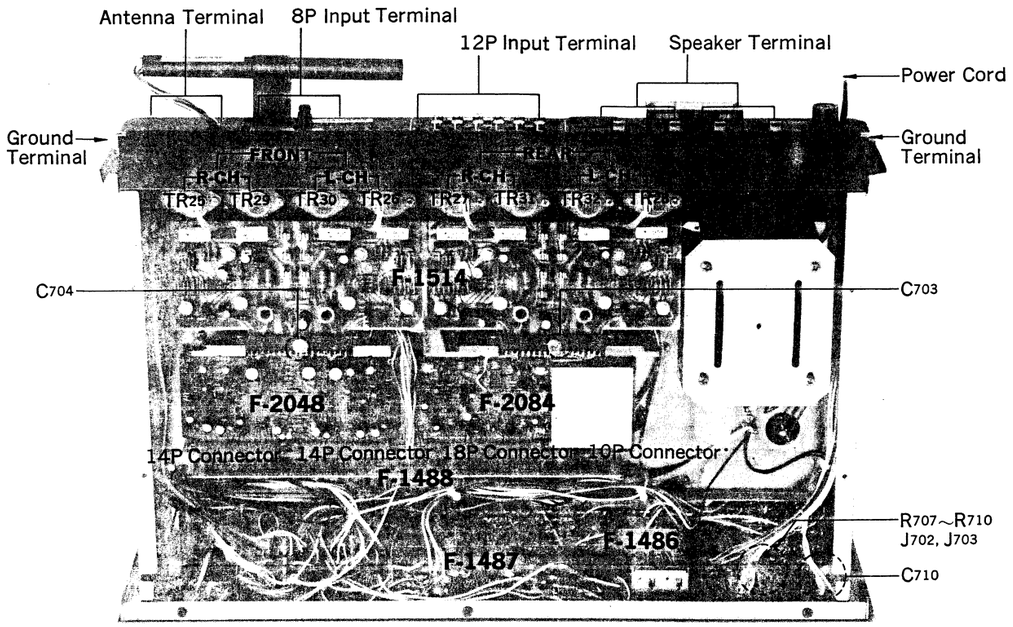

Parts List

Parts No.	Stock No.	Description	
TR25	0305631, 2 or 0305830, 1	2SC1030 (B, C) or 2SC1111 (O, R)	Transistor
TR26	0305631, 2 or 0305830, 1	2SC1030 (B, C) or 2SC1111 (O, R)	Transistor
TR27	0305631, 2 or 0305830, 1	2SC1030 (B, C) or 2SC1111 (O, R)	Transistor
TR28	0305631, 2 or 0305830, 1	2SC1030 (B, C) or 2SC1111 (O, R)	Transistor
TR29	0300551, 2 or 0300580, 1	2SA756 (B, C) or 2SA744 (O, R)	Transistor
TR30	0300551, 2 or 0300580, 1	2SA756 (B, C) or 2SA744 (O, R)	Transistor
TR31	0300551, 2 or 0300580, 1	2SA756 (B, C) or 2SA744 (O, R)	Transistor
TR32	0300551, 2 or 0300580, 1	2SA756 (B, C) or 2SA744 (O, R)	Transistor
C710	0659801	0.01μF 1.4kV C.C.	

Parts No.	Stock No.	Description	
R707	0202331	330Ω	2W C.R.
R708	0202331	330Ω	2W C.R.
R709	0202331	330Ω	2W C.R.
R710	0202331	330Ω	2W C.R.
R722	0107104	100kΩ	¼W C.R.
R723	0107104	100kΩ	¼W C.R.
R724	0107104	100kΩ	¼W C.R.
R725	0107104	100kΩ	¼W C.R.
R726	0107102	1kΩ	¼W C.R.
R727	0107102	1kΩ	¼W C.R.
J702	2430200	Headphone Jack	
J703	2430200	Headphone Jack	
	3800261	Power Cord	
	2200340	8P Input Terminal	
	2200360	12P Input Terminal	
	2290170	Speaker Terminal	
	2290160	Antenna Terminal	
	2230050	Ground Terminal	
	2420020	18P Connector	
	2420030	10P Connector	
	2420150	14P Connector	

7. PACKING LIST

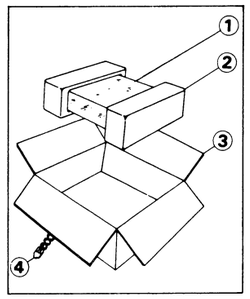

7-1. QRX-5500A

Parts No.	Stock No.	Description
1	9116631	Vinyl Cover
2	9027750	Stylofoam Packing
3	9008430	Carton Case
4	5996080	Curl Stopper

7-2. QRX-7500A

Parts No.	Stock No.	Description
1	9116631	Vinyl Cover
2	9027750	Stylofoam Packing
3	9008440	Carton Case
4	5996080	Curl Stopper

8. ACCESSORY PARTS LIST

8-1. QRX-5500A

Stock No.	Description
0433640	5A Quick Acting Fuse
3820100	AM/FM Antenna
9209320	Operating Instruction
9237060	Schematic Diagram
2410560	Short Pin Plug

8-2. QRX-7500A

Stock No.	Description
0433640	5A Quick Acting Fuse
3820040	FM Antenna
9209310	Operating Instruction
9416010	CD-4 Adjustment Record
9237050	Schematic Diagram
2410560	Short Pin Plug

9. SCHEMATIC DIAGRAM/9-1. QRX-5500A (TUNER SECTION)

* La présention et les spécifications sont susceptibles d'être modifiées sans préavis par suites d'améliorations éventuelles.
* Anderungen, die dem technischen Fortschritt dienen, bleiben vorbehalten.
* Design and specifications subject to change without notice for improvement.

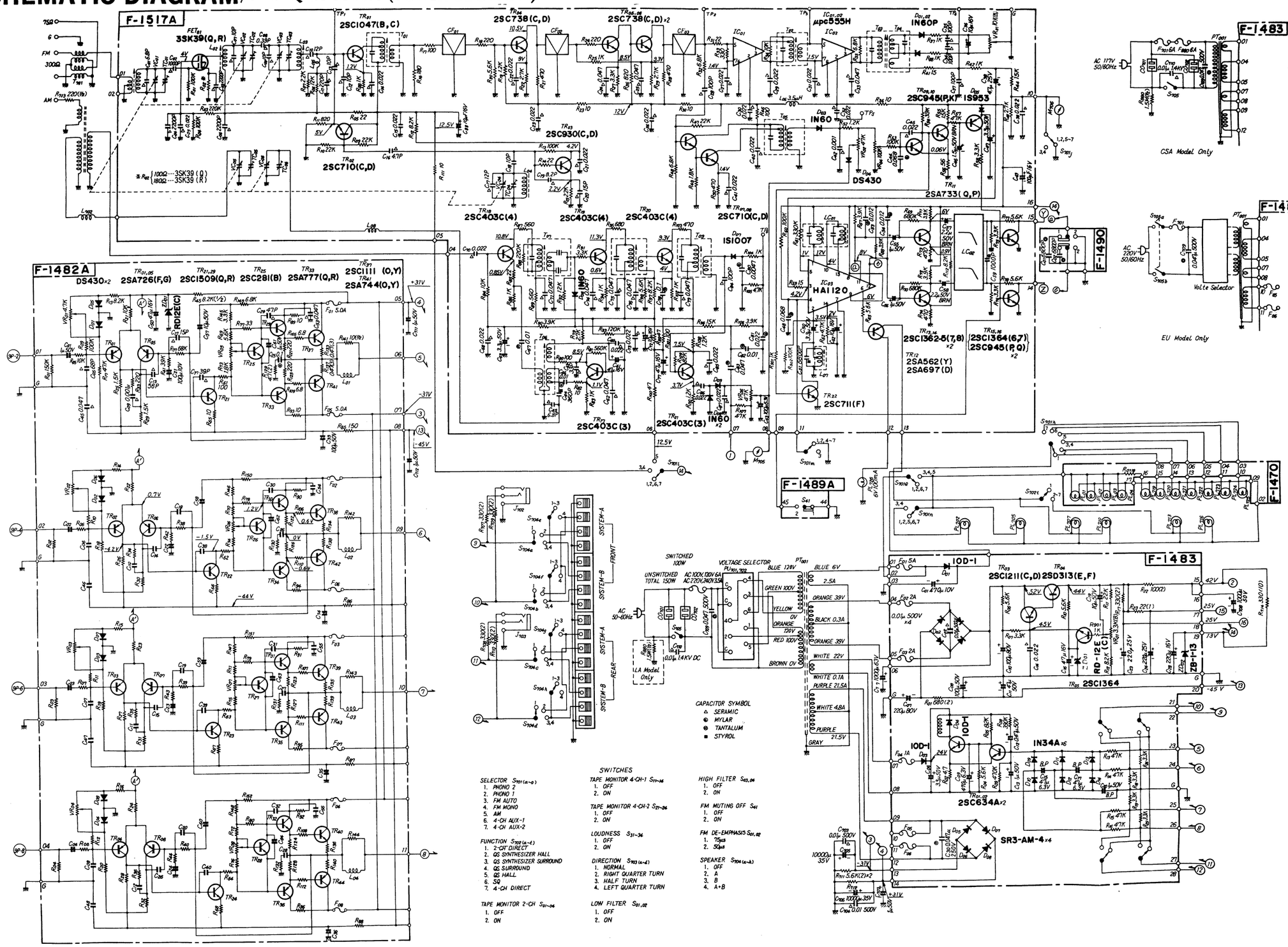

9-2. QRX-5500A (AUDIO SECTION)

* La présention et les spécifications sont susceptibles d'éter modifiées sans préavis par suites d'améliorations éventuelles.
* Anderungen, die dem technischen Fortschritt dienen, bleiben vorbehalten.
* Design and specifications subject to change without notice for improvement.

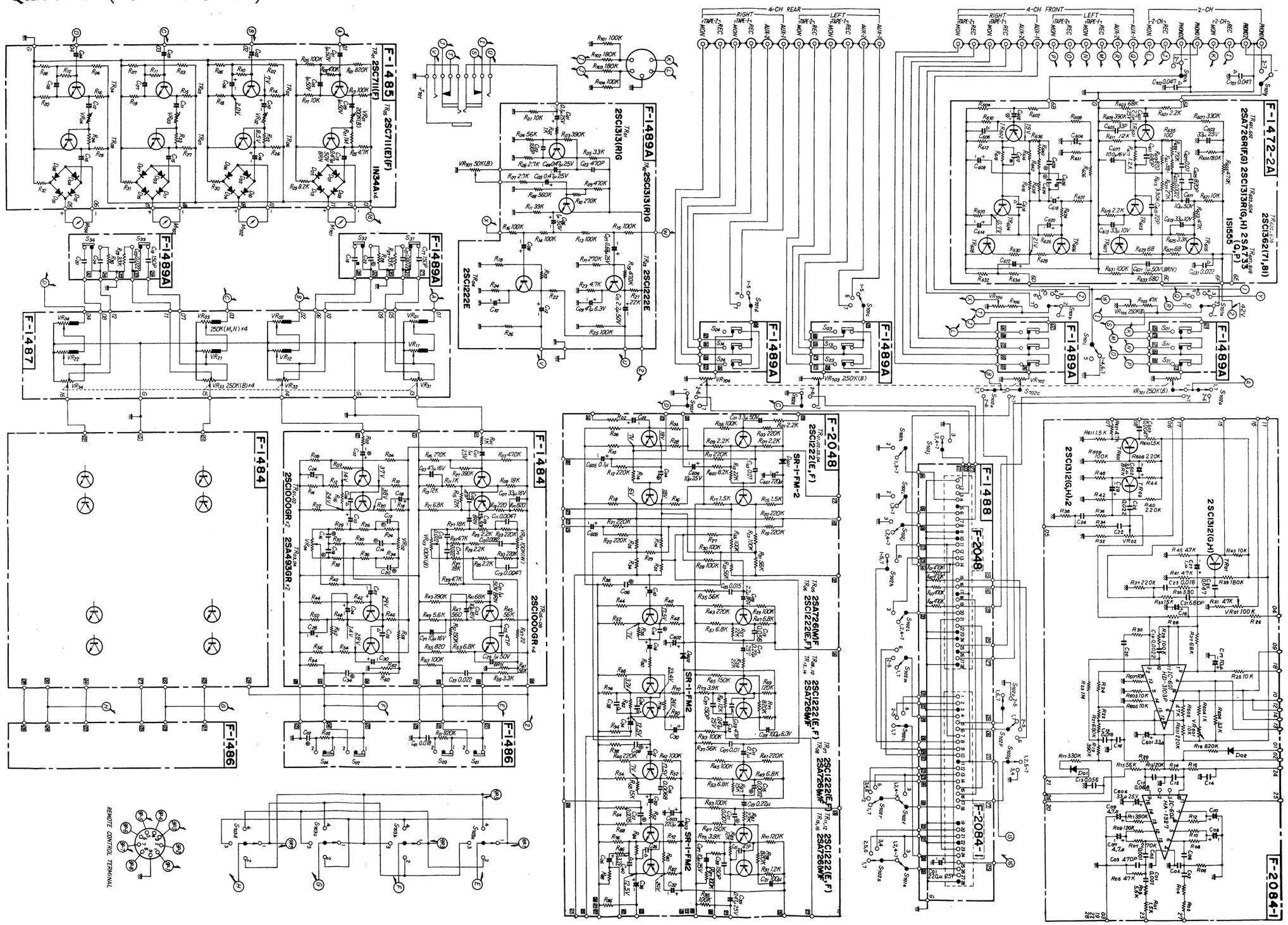

9-3. QRX-7500A (TUNER SECTION)

* La présention et les spécifications sont susceptibles d'êter modifiées sans préavis par suites d'améliorations éventuelles.
* Anderungen, die dem technischen Fortschritt dienen, bleiben vorbehalten.
* Design and specifications subject to change without notice for improvement.

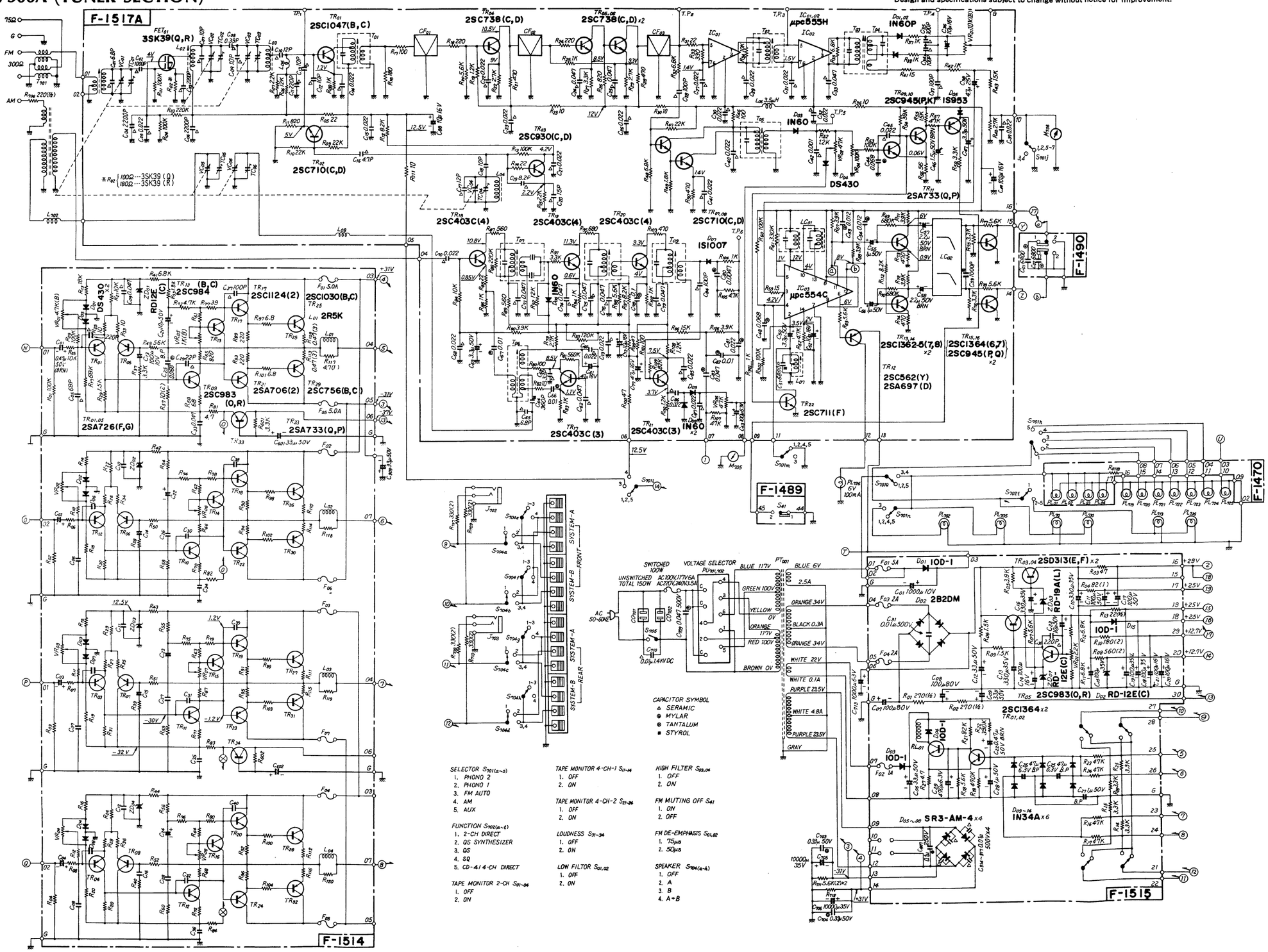

9-4. QRX-7500A (AUDIO SECTION)

* La présention et les spécifications sont susceptibles d'être modifiées sans préavis par suites d'améliorations éventuelles.
* Anderungen, die dem technischen Fortschritt dienen, bleiben vorbehalten.
* Design and specifications subject to change without notice for improvement.

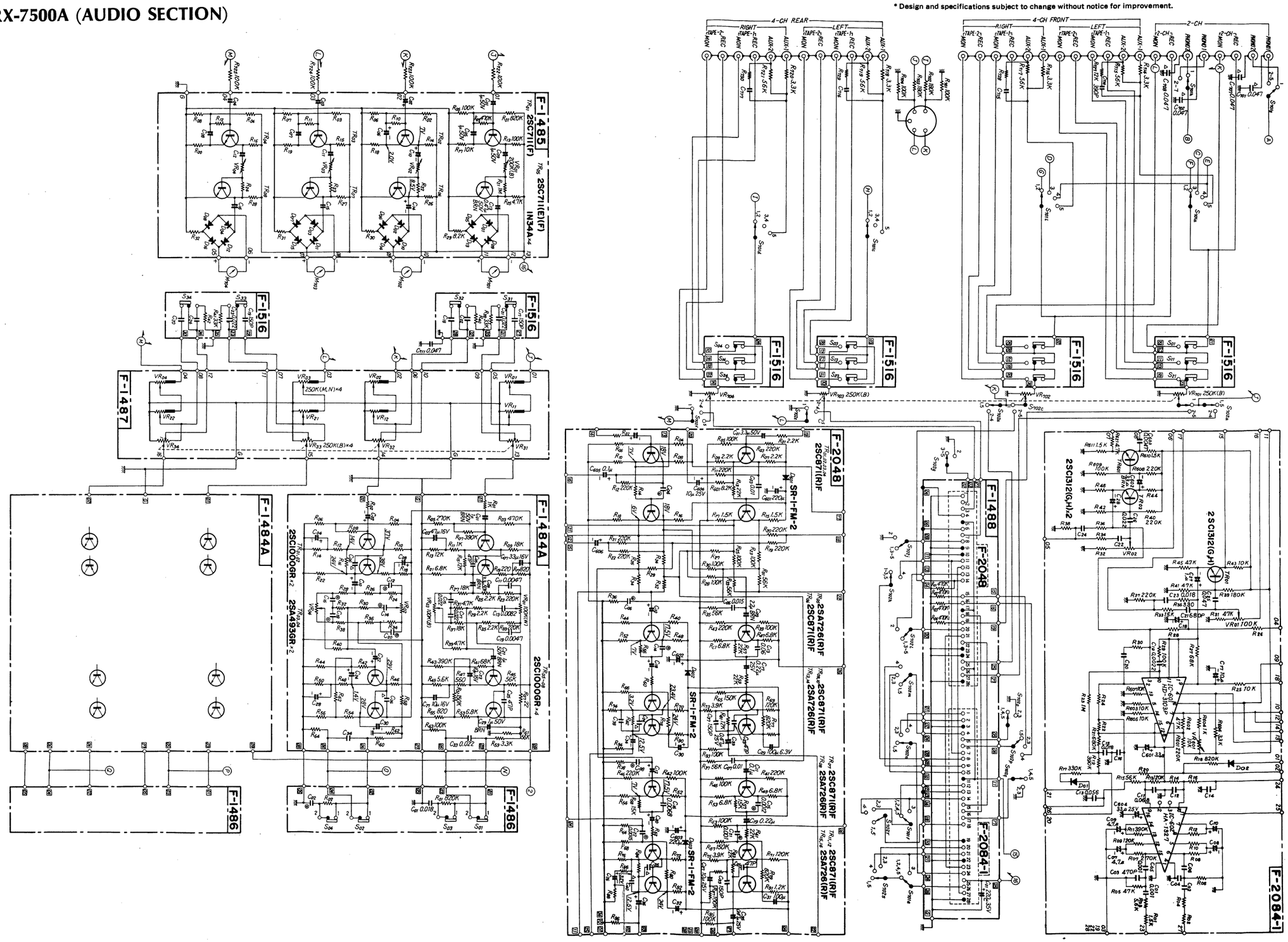

9-5. QRX-7500A EQUALIZER & CD-4 SECTION