SHERWOOD MODEL S-7310

AM/FM STEREO
DYNAQUAD RECEIVER
SERVICE MANUAL

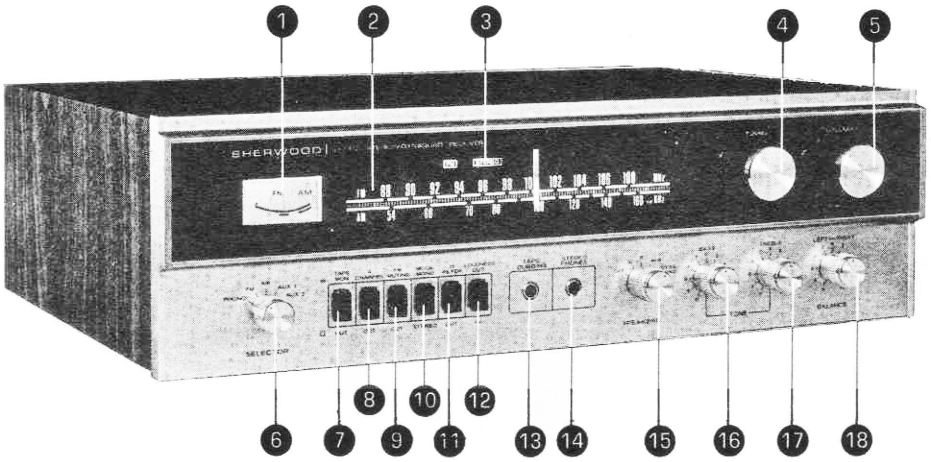

1 Zero Center Tuning Meter
For precise tuning of FM Stations. [AM: Tune maximum right hand deflection.]

2 Tuning Scales
FM band in MHz; AM band in KHz.

3 Stereo Indicator
Indicates FM stereo broadcasts.

4 Tuning
Counterbalanced for easy tuning.

5 Loudness
Master power ON/OFF and volume control for your speakers. Also automatically adds bass compensation at low levels when the Loudness switch is used.

6 Selector Control
Selects your listening source: Phono, FM, AM AUX 1, or AUX 2.

7 Tape Monitor
Permits monitoring during tape recording.

8 4-channel
For connecting 4-channel decoder [also doubles as 2nd Tape Montr.]

9 Muting
Removes FM interstation noise.

10 Mode
Depress for Mono listening.

11 Hi Filter
Cuts off scratch from records or background "hiss" from noisy FM stations.

12 Loudness
Defeats loudness compensation.

13 Tape Dubbing
Permits recording to or playback from a second tape recorder. Also, dubbing from one recorder to the other.

14 Stereo Phones
For private listening with headphones.

15 Speakers [Dynaquad]
Selects main speakers [A], remote speakers [B], both sets [A & B], or turns speakers off [for headphone listening]. Also activates Dynaquad 4-channel Matrix circuit.

16 Bass
Increases bass tones up to +14 dB, decreases to -14 dB at 50 Hz.

17 Treble
Increases treble tones up to +12 dB, decreases to -12 dB at 15 KHz.

18 Balance
Balances the relative volume levels of right and left speakers.

SHERWOOD S-7310 SPECIFICATIONS

Amplifier:

RMS POWER OUTPUT, both channels driven:
50 watts x 2 @ 4 ohms, 1 KHz.
43 watts x 2 @ 8 ohms, 1 KHz.
40 watts x 2 @ 8 ohms, 40-20,000 Hz.
38 watts x 2 @ 8 ohms, 20-20,000 Hz.

HARMONIC DISTORTION:
0.5% @ 8 ohm at rated output.
0.1% @ 8 ohm at 10 watts.

INTERMODULATION DISTORTION:
0.5% @ 8 ohms at rated output.
0.15% @ 8 ohms at 10 watts.

STEREO AND MONO SPEAKER OUTPUT IMPEDANCE: 4, 8 or 16 ohms.

STEREO HEADPHONE OUTPUT:
High and low impedance.

STEREO RECORDING OUTPUT: 200 mV.

POWER BANDWIDTH: 7-50 KHz. 0.5% Dist.

FREQUENCY RESPONSE:
Auxiliary, 20-20,000 Hz. ± 0.5dB.
Phono, RIAA Standard ± 1dB.

DAMPING FACTOR: 30:1 @ 8 ohms.

BASS CONTROL: ± 14dB @ 50 Hz.

TREBLE CONTROL: ± 12dB @ 15 KHz.

INPUT SENSITIVITY [for rated output]:
Phono, 2.0 mV.
Auxiliary, 200 mV.

INPUT CAPABILITY for ½% distortion:
Phono, 90 mV.
Auxiliary, greater than 10 V.

HUM AND NOISE:
Phono, -65dB.
Auxiliary, -80dB.
Volume Control Minimum, -85dB.

CROSSTALK: -40dB @ 20-20,000 Hz.

Tuner [FM]:

FM SENSITIVITY [IHF]:
1.8 uV [-30dB noise and distortion].

SIGNAL-TO-NOISE RATIO: -70dB.

CAPTURE RATIO: 1.2dB.

SUPPRESSION OF AM: -60dB.

TUNING RANGE: 87.5 to 108.5 MHz.

DISTORTION:
Mono, 0.25% @ 100% Modulation.
Stereo, 0.5% @ 100% Modulation.

SPURIOUS RESPONSE REJECTION: -95dB.

IMAGE REJECTION: -70dB.

IF REJECTION: -90dB.

AUTOMATIC STEREO THRESHOLD: 5 uV.

ALTERNATE-CHANNEL SELECTIVITY: 65dB.

STEREO SEPARATION: 40dB @ 1 KHz.

FREQUENCY RESPONSE:
20-15,000 Hz. ± 1dB [Stereo].

ANTENNA: 300-ohm balanced.

Tuner [AM]:

SENSITIVITY [IHF]:
10 uV. [30% Modulation for 10dB S/N].

SELECTIVITY: ± 10 KHz, 20dB.

FREQUENCY RESPONSE: 3 KHz [-6dB].

TUNING RANGE: 530 to 1625 KHz.

IMAGE REJECTION: -42dB @ 1 MHz.

ANTENNA: Ferrite Rod [rotatable].
High impedance input.

General:

POWER REQUIREMENTS: 115-125 Volts, 50/60 Hz.
[Export Model, 230V] 2 Amp, 20-220 watts fused.

AC OUTPUT: 100 watts switched.

FUSES: Power Fuse 3 Amp, 3AG. Speaker Fuses 3 Amp, 3AG. Do not use Slo-Blo Fuses.

DIMENTIONS [Overall]: 17½" W x 5¼" H x 13¼" D.

SHIPPING WEIGHT: 35.5 lbs.

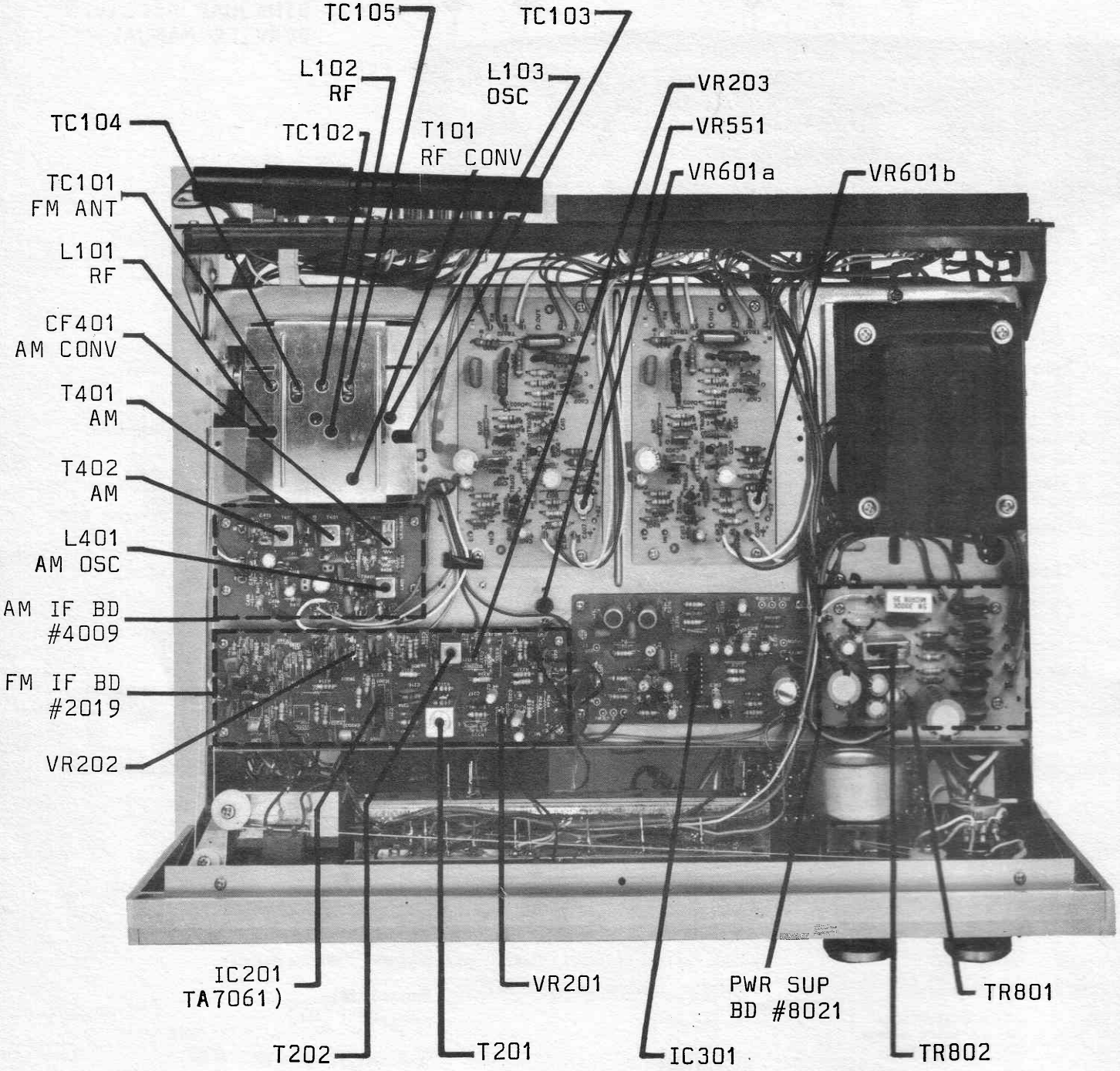

FIGURE 1 (TOP VIEW)

RECEIVER SERVICE INFORMATION

CONTENTS:

	PAGE:
PARTS LOCATIONS [Fig. 1]	Inside Covers
AMPLIFIER SERVICING AND ADJUSTMENT	1
POWER SUPPLY SERVICING	4
FM TUNER AND IF ALIGNMENT	4
PHASE-LOCK LOOP MULTIPLEX ADJUSTMENT	5
AM TUNER AND IF ALIGNMENT	6
MECHANICAL DETAILS Push-Button Repair Dial Stringing	6
ORDERING PARTS	8
PARTS LIST [See Supplements]	
SCHEMATIC DIAGRAM [See Supplements]	

- -

AMPLIFIER SERVICING AND ADJUSTMENT

NOTE:

For simplicity only the left channel and its related circuitry are described. The right channel is identical except for reference symbol numbers [See Schematic Diagram]. For parts locations, refer to Figure 1 on inside covers.

USE OF VARIAC:

It is imperative that a variable voltage line source [Variac] and a line wattmeter be used when servicing high-powered amplifiers and associated power supply circuitry. Before and after repairs are made, apply line voltage gradually and watch for abnormal power consumption. Over 25 watts (with the loudness control set at minimum) indicates a malfunction.

SPEAKER FUSE AND SPEAKER SYSTEM CHECK:

The S-7310 incorporates a speaker protection fuse in each channel. Verify that both fuses are unopened and that both speaker systems and their associated wiring are short-free.

LINE FUSE AND INITIAL CIRCUIT CHECKS:

Verify that the line fuse is unopened and check idling power consumption. The main causes for abnormal power consumption are, in order of decreasing occurance:

1. Open or shorted amplifier output, driver or pre-driver transistors [TR601-610].
2. Open or shorted power supply diodes or transistors [D801-807, TR801-802].
3. Shorted power transformer.

SUGGESTED AMPLIFIER TEST BENCH SET-UP

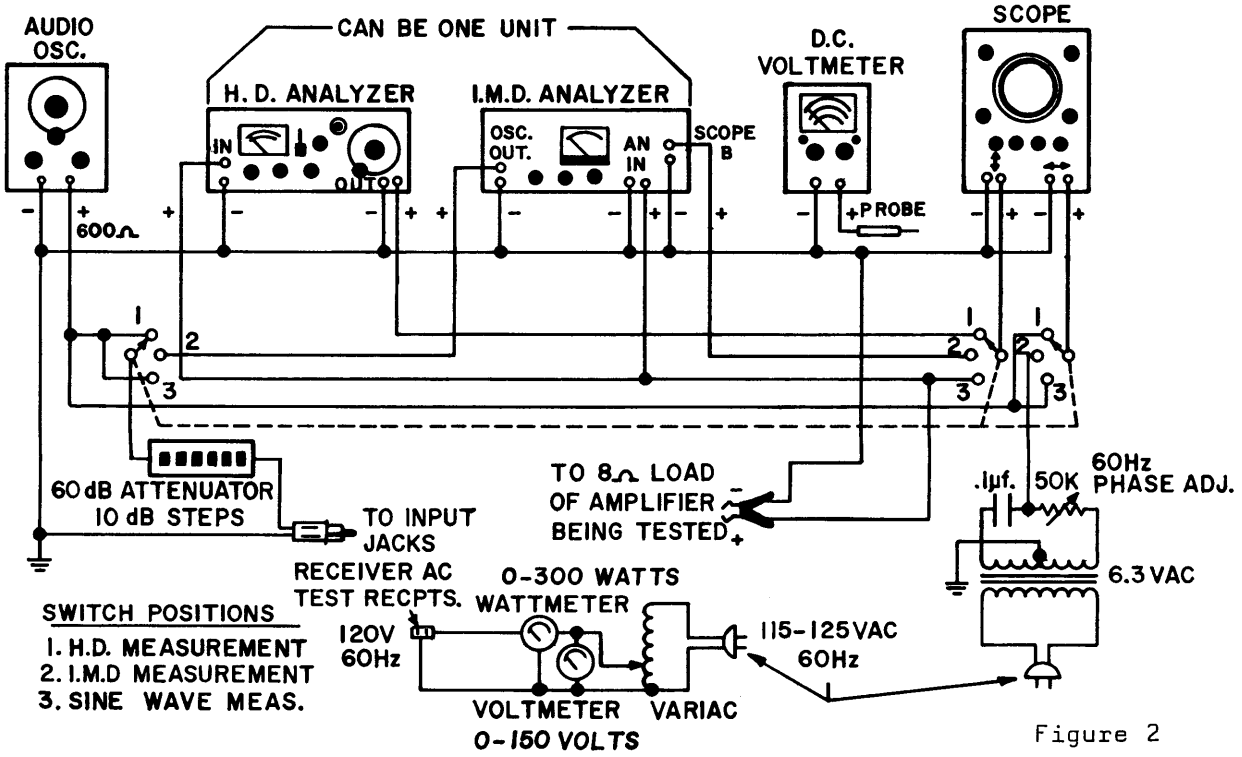

Figure 2

NOTE:

For the following tests, an 8 ohm load resistor must be connected to each of the two power amplifier (speaker) output terminals.

AMPLIFIER FAULT ANALYSIS:

If an amplifier channel is suspected, check circuit boards for burned parts and replace. Check all the transistors [TR601-610] with an ohmmeter, for opens or shorts and replace.

WARNING: Some ohmmeters may damage sensitive solid-state devices. Whenever possible, use a high resistance range [at least RX10].

Use the centerpoint voltage [measured from the + speaker terminal to ground] as a guide. Centerpoint voltage should always be Zero ± 0.2 VDC. Any deviation suggests shorted or open devices.

If channel operation is still faulty, verify that diodes [D601-D602] are normal and that there are no shorted capacitors, open resistors, etc., on the board.

Inspect underside of board for shorted pads, broken connections, etc.

When board is restored, readjust output bias [See below].

DISTORTION IN AMPLIFIER OUTPUT:

Distortion which exceeds amplifier ratings (See Front Cover) may be due to the following:

1. Mismatched output transistors.
2. Defective (low-beta) driver transistors.
3. Incorrectly adjusted output transistor bias.

OUTPUT TRANSISTOR BIAS ADJUSTMENT:

Correct bias adjustment insures cool, low-distortion operation. Bias readjustment is necessary if any driver or output transistor is replaced, or the amplifier exhibits one or more of the following symptoms:

1. Overheating of the output transistors under normal operating conditions.
2. Excessive low level Intermodulation or Harmonic Distortion [more than 0.3% @ 3.0 Volts across 8 ohms].

The following are three methods for adjusting output transistor bias:

BIAS ADJUSTMENT USING AN INTERMODULATION DISTORTION (I.M.D.) ANALYZER:

1. Connect the receiver for testing similar to Figure 2.
2. Connect an Intermodulation Distortion Analyzer with a ratio of 4:1, using 60Hz and 7000Hz, to the receiver AUX 1 input and set the SELECTOR switch to AUX 1.
3. Set the volume control to maximum and adjust the generator for a receiver output of 3.0 volts across the 8 ohm load of the amplifier channel under test.
4. While observing the resultant distortion waveform, adjust the bias potentiometer [VR601a] so that the crossover distortion is at a point of being eliminated [Class "AB"].
   NOTE: Class "A" operation [continued CW rotation] causes output transistors to overheat and draw excessive current. Refer to Figure 3 below.
5. Repeat Steps 3 to 4 for the opposite channel.

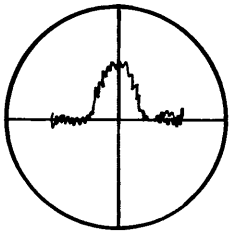

Improper Bias Adjustment

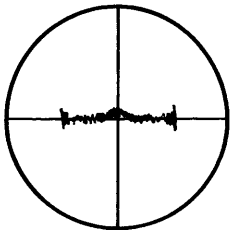

Proper Bias Adjustment

Figure 3

The following performance indicates a properly operating amplifier [with an 8 ohm load]:

1. Typically 0.1% IM Distortion @ 3.0 volts.
2. Typically 0.2% IM Distortion @ 10 volts.
3. 40 watts RMS per channel at no greater than 0.5%.

BIAS ADJUSTMENT USING HARMONIC DISTORTION ANALYZER:

1. Connect the receiver for testing similar to Figure 2.
2. Connect an oscillator with less than .05% distortion at 1KHz to the receiver AUX 1 input and set the SELECTOR switch to AUX 1.
3. Set the volume control to maximum and adjust the oscillator for a receiver output of 3.0 volts across the 8 ohm load of the amplifier channel under test.
4. Using the Harmonic Distortion Analyzer looking at the distortion of the receiver, properly nulled, make the adjustment as follows: Adjust the bias for Class "AB" operation by turning the bias potentiometer [VR601a] so that the crossover is at a point of being eliminated.
   NOTE: Class "A" operation [continued CW rotation] causes the output transistor to draw excessive current and overheat. Refer to Figure 4 below.
5. Repeat Steps 3 to 4 for the opposite channel.

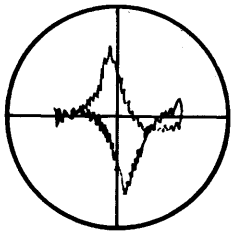

Improper Bias Adjustment

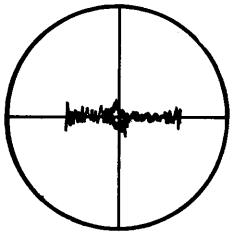

Proper Bias Adjustment

Figure 4

The following performance indicates a properly operating amplifier [with an 8 ohm load] at 1KHz:

1. Typically 0.1% THD @ 3.0 volts.
2. Typically 0.2% THD @ 10 volts.
3. 40 watts RMS per channel at no greater than 0.5%.

BIAS ADJUSTMENT USING LINE WATTMETER:

1. Turn the loudness control to minimum.
2. Adjust the bias potentiometers [VR601a & VR601b] one at a time, to the point at which the receiver begins to cause a very slight increase in line wattage consumption.

POWER SUPPLY SERVICING AND FAULT ANALYSIS

Power supply malfunctions are usually due to shorted or open diodes [D801-808], transistors [TR801-802] or a defective power transformer.

The devices may be easily checked with an ohmmeter. The transformer's operation may be checked by measuring secondary voltages with the associated circuit legs disconnected.

Shorted windings can cause abnormal power consumption in a unit that otherwise functions well.

FM TUNER AND IF ALIGNMENT (Refer to Figure 1 for parts locations)

1. Set the SELECTOR switch to FM and turn the FM MUTING switch off. Connect an FM Generator to the 300 ohm antenna terminals using a matching network, if necessary, as shown below [Figure 5].

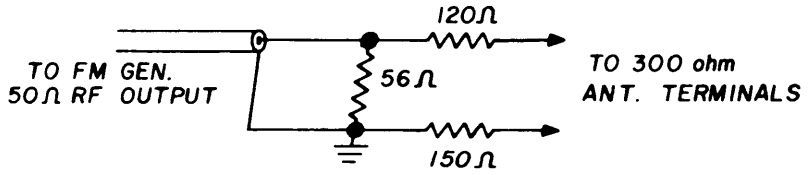

Figure 5

2. Tune the receiver to a point of no signal or interference near 90MHz.
3. Tune the FM Generator, modulated ±300KHz @ approximately 20uV output level, to the receiver frequency. Connect an RF Detector Probe to Pin 6 of the TA7061 [IC201] and center the FM IF response on the oscilloscope. The FM IF bandpass characteristics are now being displayed. Adjust the transformer core of the RF Converter [T101] for maximum gain and symmetry [Figure 6].

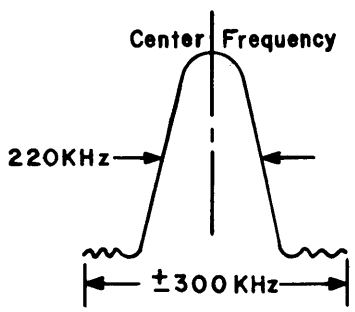

Figure 6

4. The FM front end alignment can also be determined while observing the oscilloscope display of Step 3. Tune the receiver and generator to a point of no

interfering signal near 90MHz. Check that the receiver dial pointer indicates within ±100KHz from the generator frequency. (If the generator output frequency is not accurately calibrated, a FM station can be used as a calibration reference.) If the dial deviation exceeds 100KHz, adjust the local oscillator coil [L103] slightly, until optimum dial calibration is obtained. Next, adjust RF amplifier coils [L101 and L102] for maximum gain. Tune the receiver and the generator to a point of no interference near 106MHz. Check the dial calibration. If required, adjust the local oscillator trimmer [TC103] until optimum dial calibration is obtained. Now, adjust the RF amplifier trimmers [TC101-102] for maximum gain. Repeat alignment at 90MHz and 106MHz until no further improvement is obtained.

5. DETECTOR ALIGNMENT USING OSCILLOSCOPE: To align the FM Detector, leave the FM Generator connected as in Step 1, and move the oscilloscope lead to the REC output jack on the rear panel. Reduce the modulation to ±75KHz. Adjust the top core of the detector transformer [T201] to center the tuning meter and the bottom core of the transformer [T201] for best gain and linearity [See Figure 7]. Recheck the meter centering and readjust the top core again, if necessary.

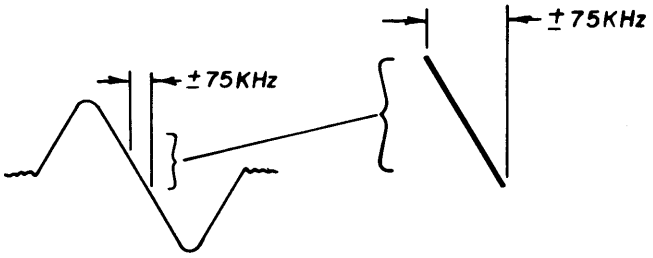

Figure 7

6. DETECTOR ALIGNMENT USING HARMONIC DISTORTION ANALYZER: A Distortion Analyzer should be used in conjunction with an oscilloscope to obtain the best linearity, using 400Hz @ ±75KHz modulation. Fine adjust the top and bottom cores of the detector transformer [T201] for the lowest distortion (slight adjustment only). Adjust the detector load resistor [VR201] for zero (0.0) volts at OUT 1 using a VTVM or observing zero indication on the meter.

7. MUTING STEREO THRESHOLD ADJUSTMENT: This receiver is equipped with a muting circuit which automatically removes or reduces the noise (rushing sound) normally heard between broadcast channels on a highly sensitive FM receiver. The noise threshold level in this electronic circuit can be adjusted with the Muting Threshold Control [VR203] located on the FM IF board. Normal threshold level is 5 microvolts.

   To adjust the muting sensitivity, connect the FM Generator and oscilloscope as in Step 5 of the FM Alignment. With the MUTING switch in, slowly increase the generator output from zero to the automatic muting threshold level. Audio can now be observed on the oscilloscope. The desired threshold level can be set by adjusting VR203 and repeating the above. The pre-adjusted narrow band gain control [VR202] may be adjusted to compensate for RF or IF gain changes, if normal threshold operation can not be obtained with VR203.

   If, when tuning through a station, the hush/stereo threshold does not switch symmetrically, align T202 for symmetry.

PHASE-LOCK LOOP MULTIPLEX ADJUSTMENT

NOTE: This receiver utilizes an integrated circuit phase-lock loop (PLL) stereo modulator. The phase-lock loop is essentially a free-running 76KHz oscillator (subsequently divided down to 38KHz and 19KHz) which locks onto the stereo pilot tone of the transmitted signal, enabling accurate signal decoding. Proper adjustment of the free-running oscillator control [VR301] is essential for stability and proper channel separation.

PLL ADJUSTMENT USING FREQUENCY COUNTER AND FM STEREO GENERATOR:

Tune the receiver to a point of no signal or interference.

Tune the generator to the receiver frequency and adjust it for an unmodulated signal at 100 microvolt output. With counter probe attached to Pin 10 (test pin provided) of IC301, adjust VR301 for 19KHz ±10Hz. Using a stereo test signal, adjust VR551 (on the chassis near the multiplex board) for best total separation and minimize differences in the left-to-right and right-to-left separation. The separation should be 40dB minimum in reference to 100% modulated audio at 1KHz.

If 40dB is not obtainable, apply pilot signal only and check the left and right multiplex outputs for 19KHz/38KHz residual. It should be a minimum of -50dB below audio reference.

PLL ADJUSTMENT USING FM STEREO GENERATOR:

With the receiver tuned to a stereo signal, adjust VR301 to determine the end-points for stereo lock-in. Set the control halfway between these end-points. Using a stereo test signal, adjust VR551 (on the chassis near the multiplex board) for best separation.

AM TUNER AND IF ALIGNMENT

1. Set the receiver SELECTOR switch to AM. Tune the receiver to a point of no signal or interference near 600KHz. Connect the scope/VTVM to the REC output jack. Connect the AM Generator output to the receiver AM Antenna terminal through a 330 ohm resistor.
2. Adjust the AM Generator to 455KHz RF output, modulated 400Hz, 50%. Tune the AM Converter [CF401], 1st AM IF [T401] and the 2nd AM IF [T402] cores for maximum audio output.
3. Adjust the AM Generator for 600KHz. If required, adjust the AM Oscillator [L401] so that the generator signal is received by the receiver at 600KHz, as indicated on the dial scale. Adjust the Rod Antenna core [L451] located at the end of the antenna rod assembly for maximum output as indicated on the scope/VTVM.
4. Tune the receiver and generator to a point of no interfering signal near 1400 KHz. Check the dial calibration and if necessary, adjust the AM Oscillator Trimmer [TC105] for optimum dial calibration. Adjust the Antenna Trimmer [TC104] for maximum output.
5. Repeat Steps 3 and 4 until no further improvement is obtained.

MECHANICAL DETAILS

PUSH-BUTTON REPAIR PROCEDURE:

To repair a defective section of the push-button assembly proceed as follows:

1. Each button may be disassembled individually.
2. Remove the push-button cover.
3. Hold your finger on the plunger so that the plunger can not push outward and by using a long nose pliers, move the plunger spring away from the switch body until the locking pin can be removed.
4. Remove the locking pin and slowly release the push-button plunger and remove it from the assembly.
5. Locate the malfunction and repair the defective part by refering to the push-button detail for disassembly and reassembly of the various sections.
6. Replace the plunger spring and insert the push-button plunger into the switch assembly holding it in, to about the normal out position.
7. Carefully grasp the locking pin at its front edge with long nose pliers and slowly compress the plunger spring until the locking pin can be inserted in the switch body.
8. Release the spring, being careful of correct assembly.
9. Replace the push-button cover.

A - PUSH-BUTTON
B - PUSH-BUTTON SHAFT
C - CONTACT SPRINGS
D - CONTACTS
E - SPRING
F - FRAME
G - SWITCH BODY
H - LOCKING PIN

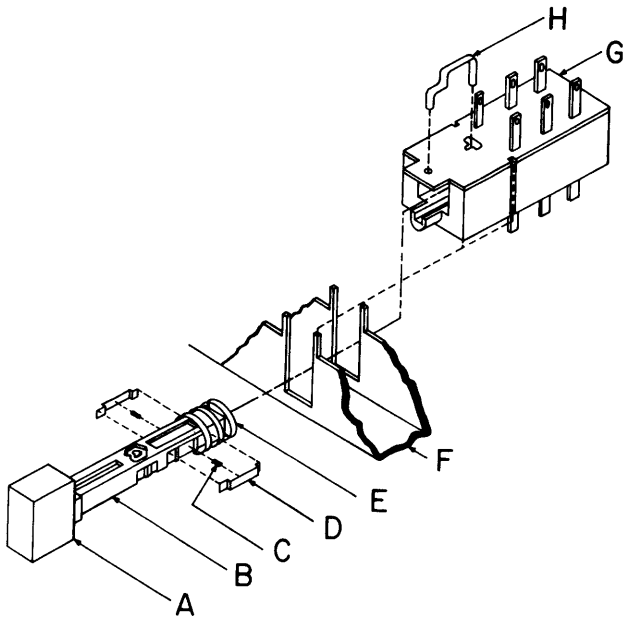

PUSH-BUTTON SWITCH DETAIL

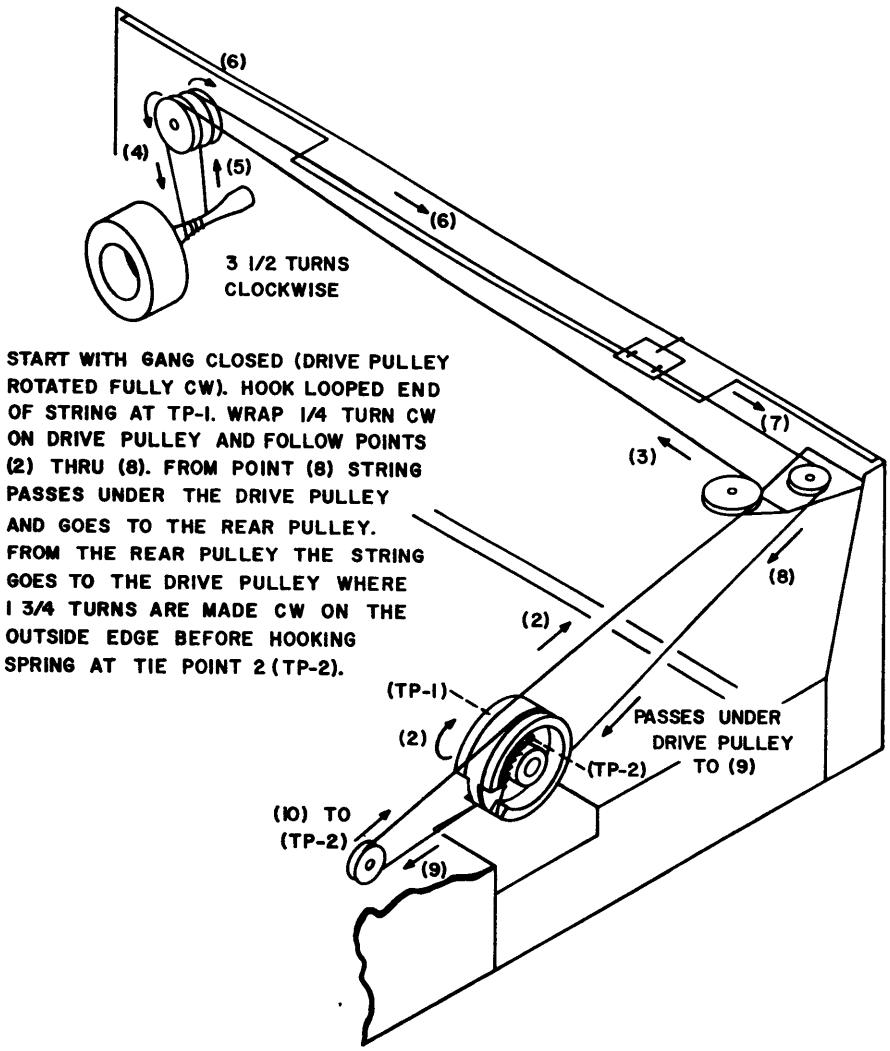

DIAL STRING DETAIL

ORDERING PARTS

When ordering replacement parts, always include part numbers (see Parts List).

When defective parts are returned for replacement under warranty (Authorized Service Stations only) include a list, by part number and value, of the parts returned. Request either credit or replacement parts.

The return of entire circuit boards for replacement is normally not covered by warranty, except in case where component failure has resulted in physical damage to the board itself.

If a set or board cannot be repaired, return the complete receiver to Sherwood Factory Service Laboratory, 4300 North California Avenue, Chicago, Illinois 60618. Include a description of the malfunction.

NOTES

SHERWOOD MODEL S-7310 REPLACEMENT PARTS LIST

ALL PRICES SUBJECT TO CHANGE WITHOUT NOTICE

TRANSISTOR'S & FET'S	REFERENCE	PART NO.	LIST PRICE
2SA678-7	TR606a,b	30000301	$ .91
2SA706-2	TR608a,b	30000232	2.80
2SA763	TR601a,b; 602a,b	30000331	.98
2SC536F	TR301, 302, 605a,b	30200131	.65
2SC693FU	TR502a,b	30200124	.91
2SC693UA	TR501a,b	30200111	.91
2SC710C	TR202, 205	30200381	.72
2SC710D	TR201, 203, 204	30200382	.72
2SC711F	TR206, 207, 604a,b	30200362	.65
2SC839	TR103	30200832	.67
2SC930D	TR401, 402, 403	30200271	.72
2SC1000GR	TR901a,b; 902a,b	30200712	.91
2SC1111 [Output]	TR609a,b; 910a,b	30200611	5.88
2SC1124-2	TR603a,b; 607a,b	30200682	2.28
2SC1211	TR801	30200425	1.24
2SC1364-7	TR303, 304	30200861	.59
2SD361	TR802	30300230	1.76
3SK45 [FET]	TR101, 102	30400071	3.97

INTEGRATED CIRCUIT'S			
SN76115N	IC301	30900250	10.06
TA7061	IC201	30900040	5.27

DIODES, SIGNAL, POWER & ZENER			
1N60	D402, 403, 404, 601a,b; 602a,b	30600010	.31
1N60AMZ	D451	30600013	.31
1N60P	D201, 202, 203, 204, 205, 206, 208, 209, 210, 211, 212	30600011	.31
1S2473	D301	30600410	.31
SR-1K2[1.6A, 100 PIV]	D805, 806	30600540	.55
WZ-120[12VZ, 5%, ½W]	D807, 808	30600370	1.05
BULLET[3A, 400 PIV]	D801, 802, 803, 804	30600520	1.40

ELECTROLYTIC CAPACITOR'S [PC unless otherwise specified]			
0.22 @ 50V [Non-Polar]	C306, 323	64545224	.86
0.47 @ 50V [Non-Polar]	C305	64545474	.86
1 @ 50V	C309, 310, 319, 320, 601a,b	64045105	.33
1 @ 50V [NP][Axial]	C232	64545105	$ .63
1.5 @ 35V [Tantalum]	C507a,b	66064155	1.17
2.2 @ 25V	C228	64043225	.86
3.3 @ 35V [Tantalum]	C501a,b	66063335	1.30
4.7 @ 25V	C218, 301, 302, 813, 901a,b; 902b, 903a,b; 904a,b	64043475	.71
4.7 @ 25V [Axial]	C902a	64143475	.45
10 @ 16V	C321	64042106	.44
10 @ 25V	C502a,b; 506a,b	64043106	.47
10 @ 50V	C808	64045106	.48
22 @ 6.3V	C406	64040226	.41
33 @ 6.3V	C604a,b	64040336	.48
33 @ 50V	C606a,b	64045336	.85
47 @ 6.3V	C417	64040476	.52
47 @ 16V	C412, 812	64042476	.58
47 @ 50V	C510a,b; 811	64045476	.71
100 @ 6.3V	C505a,b	64040107	.54
100 @ 50V	C607a,b	64045107	1.08
220 @ 16V	C809	64042227	.84
220 @ 50V	C810	64045227	1.01
330 @ 16V	C322	64042337	1.04
330 @ 35V	C908	64044337	1.06
470 @ 50V	C807	64045477	1.54
4700 @ 50V [Can]	C851, 852	64345478	6.71

COIL'S & TRANSFORMER'S				
COIL, FM ANTENNA	L101	#118A	35501181	1.09
COIL, FM RF	L102	#118B	35501182	1.01
COIL, FM OSCILLATOR	L103	#111L	35501116	1.09
COIL, RF CHOKE	L151		35500100	.55
COIL, RF CHOKE, 33uH	L201, 203		35500090	.52
COIL, 39 mH	L301, 302		35500250	1.17
COIL, AM OSCILLATOR	L401	#402L	35504026	.94
COIL, RF CHOKE, 100uH	L402, 403		35500020	.52
COIL, AM ROD ANTENNA	L451		35400123	5.54
COIL, RF CHOKE, 8 uH	L601a,b		35500170	.86
TRANSFORMER, POWER	T1		35900148	45.80
TRANSFORMER, FM IF	T101	#108A	35701081	1.25
TRANSFORMER, FM DET.	T201	#213D	35702134	2.65
TRANSFORMER, AM DET.	T202	#204E	35702045	1.20
TRANSFORMER, AM IF	T401	#403B	35704032	1.09
TRANSFORMER, AM IF	T402	#401D	35704014	1.09

(Over)

ELECTRONIC COMPONENTS	REFERENCE NO.	PART NO.	LIST PRICE
CERAMIC FILTER [CFS-107M]	CF201, 202, 203	35300006	$1.40
CERAMIC FILTER [CFZ-455C]	CF401	35300003	2.18
METER, TUNING	M	60100013	6.32
PILOT LIGHT, 8V/0.25A	PL1 - 4 [Dial]	37008019	.82
PILOT LIGHT, 8V/.05A	PL5 - 10 [Mode]	37008034	1.09
PILOT LIGHT, 8V/0.25A	PL12 [Fuse Type]	37008006	.88
POTENTIOMETER, 100K	VR552a,b[Balance]	28000090	2.98
POTENTIOMETER, 100K	VR553a,b; S9 [Loudness]	28000051	5.97
POTENTIOMETER, 100K	VR901a,b; 902a,b [Tone]	28000040	3.62
RC NETWORK [P1K0.01]	CR201, 202, 203, 204	43000011	.62
RC NETWORK [S1K0.01]	CR205	43000001	.62
SWITCH, 6 PUSH-BUTTON	S2, 3, 4, 5, 6, 7	27200020	7.18
SWITCH, ROTARY	S1 [Selector]	27100095	8.08
SWITCH, ROTARY	S8 [Speaker Sel]	27100094	4.29
TRIMMER CAPACITOR	TC103	26010023	.76
TRIMMER RESISTOR 10K	VR201	28100035	.62
TRIMMER RESISTOR 5K	VR202, 203, 301	28100034	.62
TRIMMER RESISTOR 50K	VR401	28100020	.62
TRIMMER RESISTOR 20K	VR402	28100008	.63
TRIMMER RESISTOR 20K	VR551 [Sep Adj.]	28100081	1.33
TRIMMER RESISTOR 1K	VR601a,b	28100047	.62
TUNING GANG, AM/FM	VC101	26250061	9.40

MECHANICAL COMPONENTS		
ESCUTCHEON ASSEMBLY	10106001	28.20
DIAL SCALE	20078001	5.04
DIAL STRING DRUM	21005002	.64
FLYWHEEL AND SHAFT ASSEMBLY	23039001	4.65
DIAL POINTER, ILLUMINATED	25030001	3.85
KNOBS, SMALL WITH INDICATOR	29066001	1.70
KNOB, LARGE WITHOUT INDICATOR	29067001	1.40
KNOB, LARGE WITH INDICATOR	29068001	1.48
KNOBS, PUSH-BUTTON SWITCH, BLACK	29069001	.23
FUSE, 3 AMP, 250V	312003	.23
JACK, STEREO HEADPHONE (Open circuit)	33030400	1.20
RECEPTACLE BOARD, 7 PHONO JACKS	33070100	3.22
RECEPTACLE BOARD, 8 PHONO JACKS	33080600	3.57
PILOT LIGHT HOLDER, FUSE TYPE	34011003	.94
FUSE HOLDER, LINE & SPEAKER FUSE	34032001	1.81
WOODEN CABINET	85049001	28.00
CARTON, SHIPPING WITH POLYFORMS	86139001	5.00

SHERWOOD ELECTRONIC LABORATORIES, INC., 4300 N. CALIFORNIA AVE., CHICAGO, ILLINOIS 60618 312-478-7300

Litho in USA 11/74

SHERWOOD S-7310
AM/FM STEREO/DYNAQUAD RECEIVER

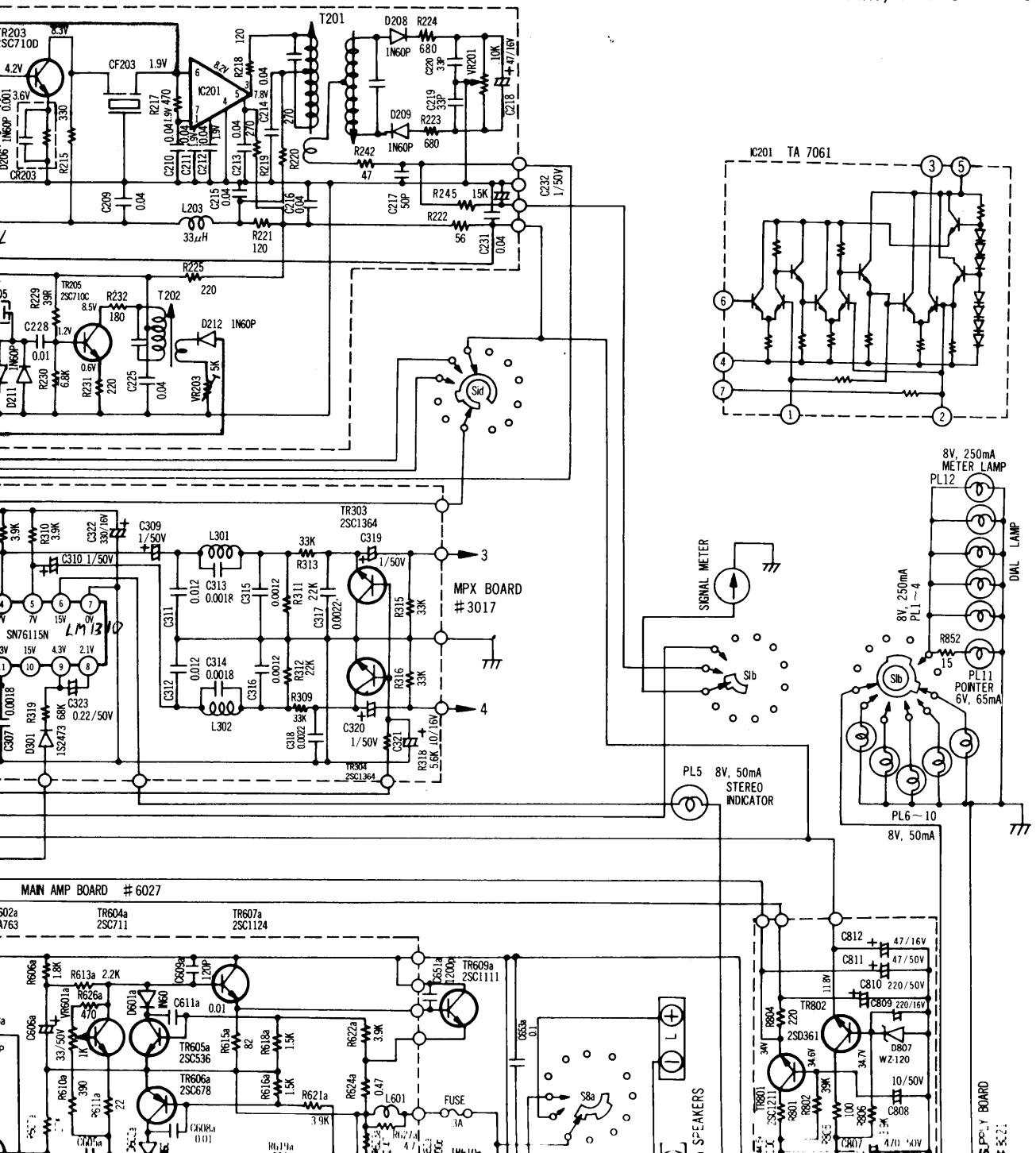

G2 D G1 S	3SK45
E C B	2SC711 2SC710 2SC1211
B C E	2SC1364 2SA678
B C E	2SC693 2SC536 2SC930
B C E	2SC1000
B C E	2SA763 2SC839
E B C	2SA706 2SC1124
B C E	2SD361
B E C (CASE)	2SC1111

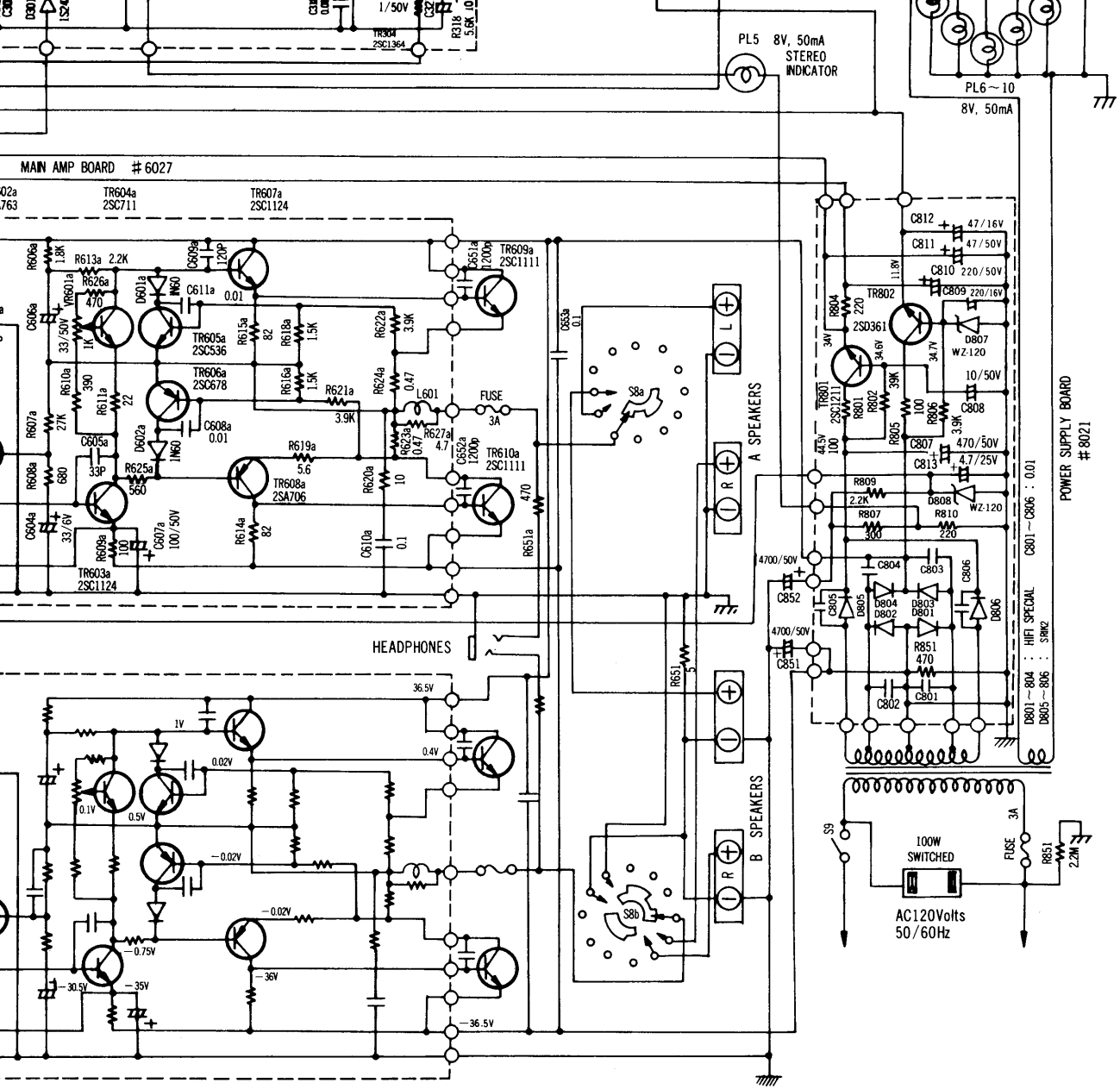

B C E	2SC1000
B C E	2SA763 2SC839
E B C	2SA706 2SC1124
B C E	2SD361
B E C (CASE)	2SC1111

SUBSTITUTE TRANSISTORS & IC	
TR101, 102	3SK37, 3SK41, 3SK35
TR103	2SC710, 2SC1047
TR201～205	2SC930, 2SC380, 2SC929
TR206, 207, 604	2SC536, 2SC693, 2SC828, 2SC1364
TR301～302	2SC828, 2SC537, 2SC1363, 2SC1364
TR303, 304	2SC828, 2SC537, 2SC536, 2SC1363
TR401～403	2SC710, 2SC380, 2SC929
TR501, 502	2SC1000, 2SC1345, 2SC1222
TR601, 602	2SA666, 2SA640, 2SA705
TR603, 607	2SC1567, 2SD414, 2SD415
TR606	2SA666, 2SA640, 2SA763
TR608	2SA794, 2SB548, 2SB549
TR609, 610	2SC1030, 2SD323, 2SC1051
TR801	2SC1166, 2SC1384
TR802	2SD330, 2SD234
TR901, 902	2SC1345, 2SC1222, 2SC693
IC301	HA1156, MC1310

SCHEMATIC DIAGRAM

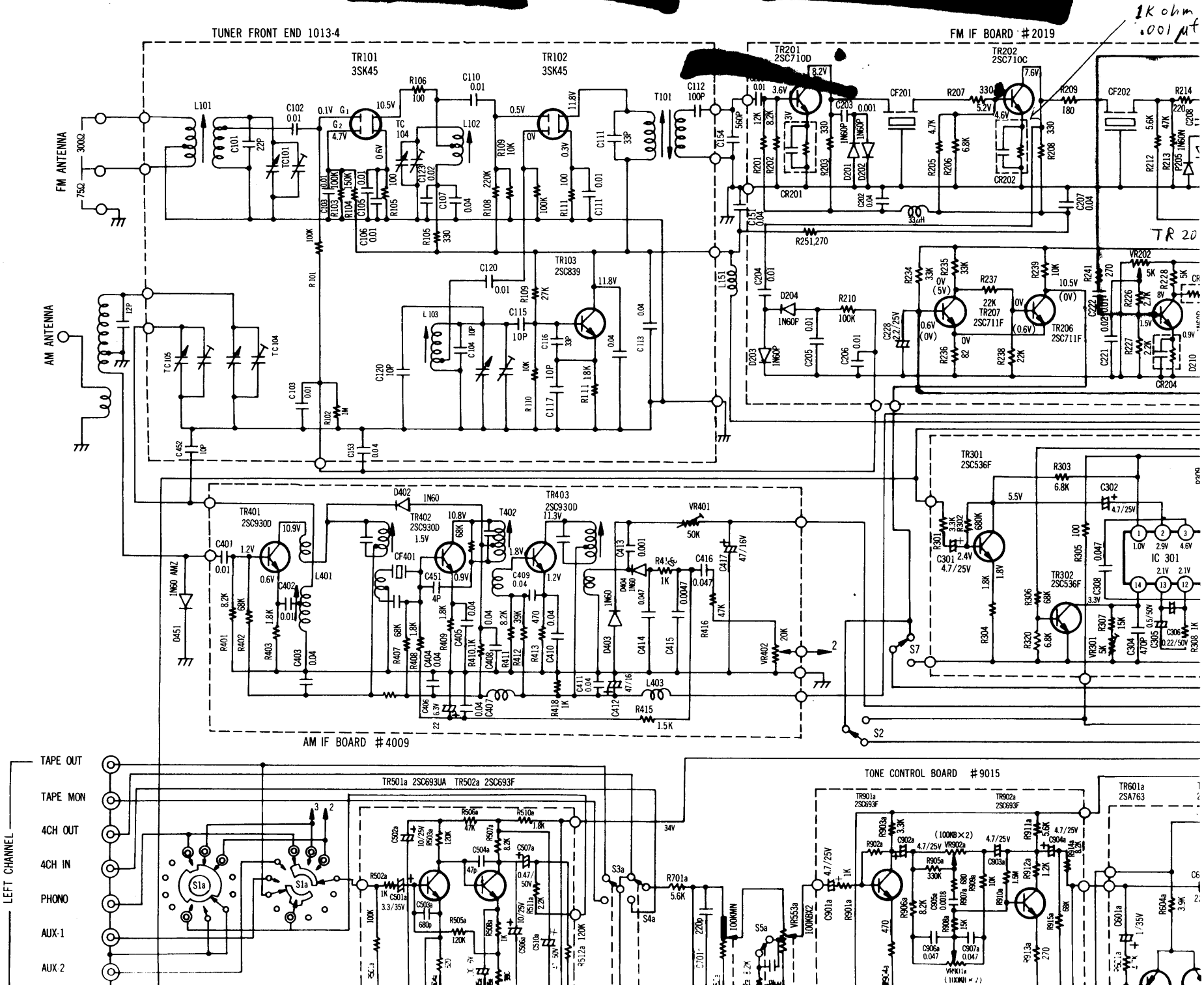

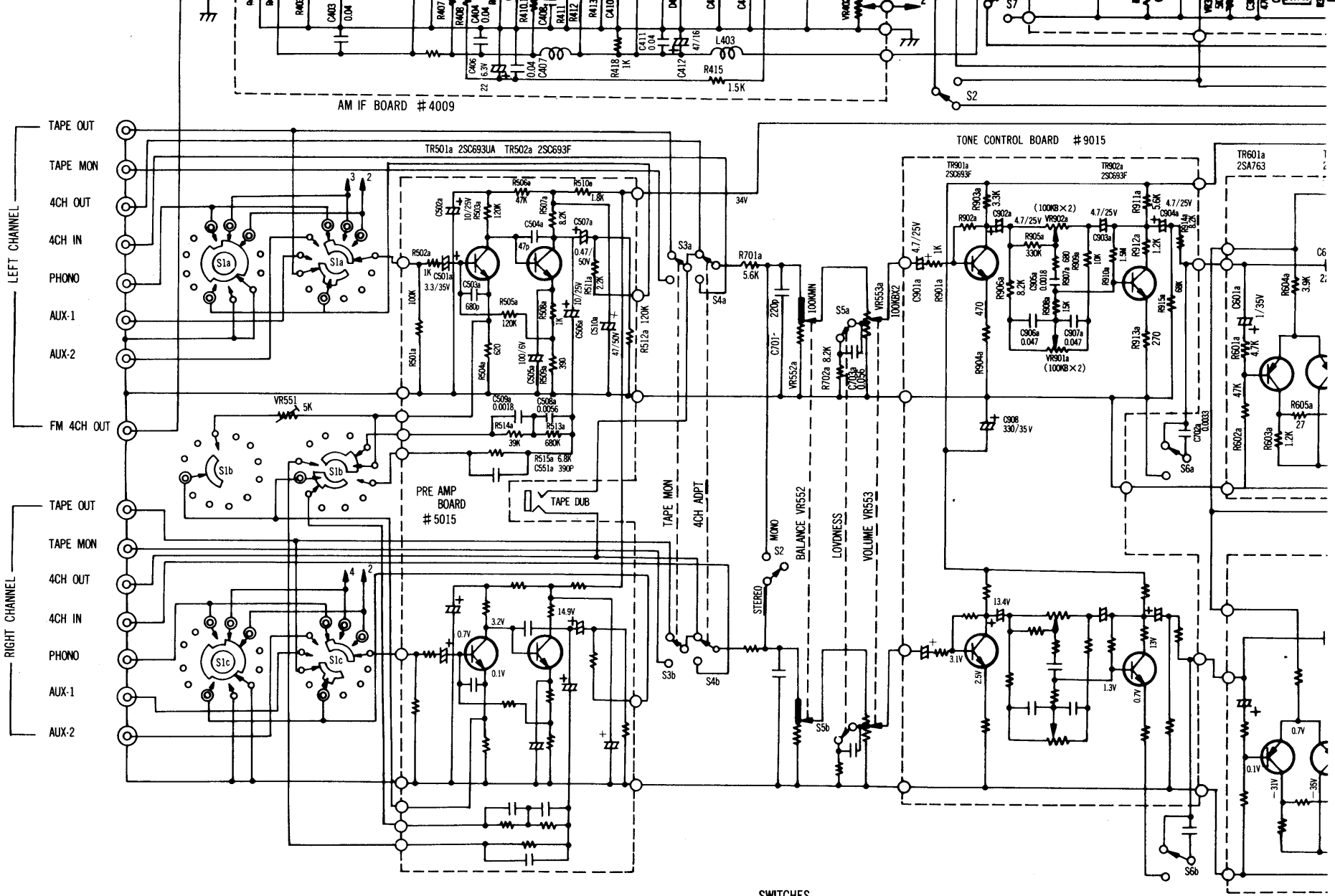

Note:
1. Resistance values are indicated in ohms unless otherwise specified (K=1,000, M=1,000,000)
2. Capacitance values are shown in microfarads unless otherwise noted (P=micro−microfarads)
3. DC Voltages are referenced to ground under the following conditions.
   No signal.
   ( ) 1000μV FM Stereo Signal.

SWITCHES

S1: INPUT SELECTOR	S5: LOUDNESS
S2: MONO-STEREO	S6: HIGH FILTER
S3: TAPE MONITOR	S7: MUTING
S4: 4CH ADAPTOR	S8: SPEAKER
	S9: POWER

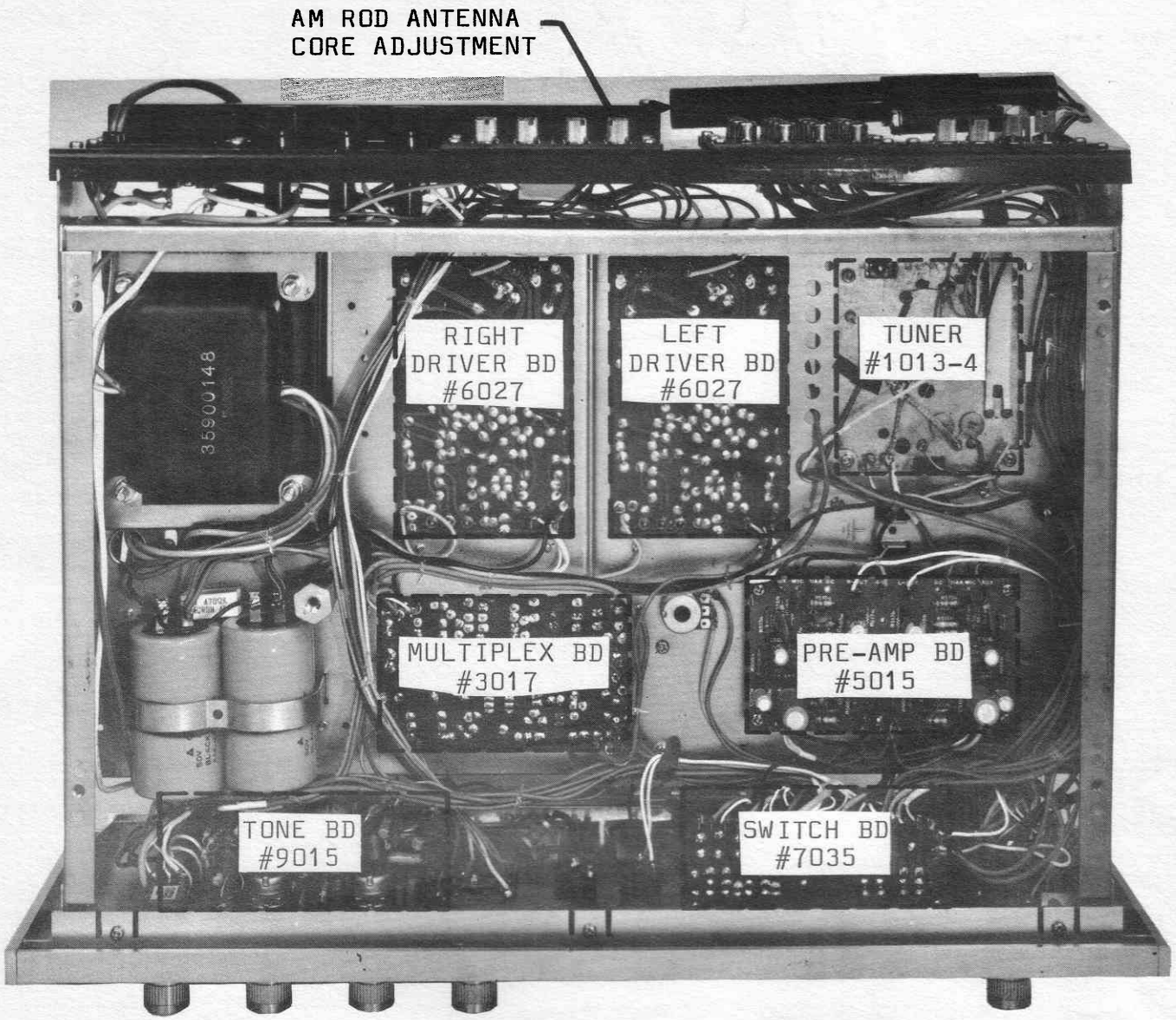

FIGURE 1 (BOTTOM VIEW)

SHERWOOD ELECTRONIC LABORATORIES, INC.

4300 NORTH CALIFORNIA AVENUE, CHICAGO, ILLINOIS 60618 312-478-7300

Litho in U.S.A. 12-74