ORDER NO. SD7910-1626

Service Manual

FM/AM Stereo Receiver

SA-404

(M), (MC)

Simulated wood cabinet

* The model SA-404 (M) is available in U.S.A.
* The model SA-404 (MC) is available in Canada.

TECHNICAL SPECIFICATIONS (Specifications are subject to change without notice for further improvement.)

AMPLIFIER SECTION

Rated minimum sine wave RMS power output 20 Hz ~ 20 kHz both channels driven 0.04% total harminic distortion	50 W per channel (8 ohms)
1 kHz continuous power output both channels driven 0.04% total harmonic distortion	55 W per channel (8 ohms) 60 W per channel (4 ohms)
Dynamic headroom	1.4 dB (8 ohms)
Total harmonic distortion	
rated power at 20 Hz ~ 20 kHz	0.04% (8 ohms)
half power at 20 Hz ~ 20 kHz	0.02 % (8 ohms)
half power at 1 kHz	0.009% (8 ohms)
SMPTE intermodulation distortion	0.04 % (8 ohms)
Frequency response	
PHONO	RIAA standard curve +0.3 dB
TUNER, AUX, TAPE	7 Hz ~ 45 kHz, −1 dB 20 Hz ~ 20 kHz, +0.2 dB, −0.2 dB
Input sensitivity	
PHONO	0.4 mV (2.5 mV, IHF "66)
TAPE 1, 2	20 mV (150 mV, IHF '66)
S/N (IHF, A)	
PHONO	73 dB (80 dB, IHF '66)
TUNER, AUX, TAPE	78 dB (95 dB, IHF '66)
Maximum input voltage	
PHONO	120 mV (150 mV, 1 kHz)
Input impedance	
PHONO	47 kilohms
TAPE 1, 2	27 kilohms
Tone controls	
BASS	50 Hz, +10 dB ~ −10 dB
TREBLE	20 kHz, +10 dB ~ −10 dB
Acoustic controls (at tone "0" position)	
LOW BOOST	100 Hz, +6 dB
HIGH BOOST	10 kHz, +6 dB
Low filter	100 Hz, −6 dB/oct.
High filter	7 kHz, −6 dB/oct.
Loudness control (volume at −30 dB)	50 Hz, +9 dB
Output voltage	
REC OUT	150 mV
Low frequency damping factor	34 (8 ohms) 17 (4 ohms)
Load impedance	
MAIN or REMOTE	4 ~ 16 ohms
MIAN and REMOTE	8 ~ 16 ohms

FM TUNER SECTION E(500 ~ 599)

Frequency range	88 ~ 108 MHz
Sensitivity	10.8 dBf (1.9μV, IHF '58)
50 dB quieting sensitivity	
MONO	13.7 dBf (2.7μV IHF '58)
STEREO	37.2 dBf (39.7μV IHF '58)
Total harmonic distortion	
100 Hz	0.15 % (MONO), 0.3 % (STEREO)
1 kHz	0.15 % (MONO), 0.3 % (STEREO)
6 kHz	0.3 % (MONO), 0.4 % (STEREO)
S/N MONO	75 dB
STEREO	70 dB
Frequency response	20 Hz ~ 15 kHz, +1 dB, −2 dB
Alternate channel selectivity	70 dB
Capture ratio	1.2 dB
Image rejection at 98 MHz	60 dB
IF rejection at 98 MHz	75 dB
Spurious response rejection at 98 MHz	82 dB
AM suppression	55 dB
Stereo separation	
1 kHz	45 dB
10 kHz	35 dB
Carrier leak	
19 kHz	−40 dB
38 kHz	−50 dB
Antenna terminals	300 ohms (balanced) 75 ohms (unbalanced)

AM TUNER SECTION

Frequency range	525 ~ 1605 kHz
Sensitivity	30μV, 300μV/m
Selectivity	30 dB
Image rejection at 1000 kHz	50 dB
IF rejection at 1000 kHz	40 dB

GENERAL

(E (700 ~ 799)

Power consumption	300 W, 345 VA
Power supply	AC 120V, 60 Hz
Dimensions (W x H x D)	480 x 160 x 293 mm (18-29/32" x 6-5/16" x 11-17/32")
Weight	8.4 kg (18.5 lb.)

Weights and dimensions shown are approximate.

Technics

Panasonic Company
Division of Matsushita Electric Corporation of America
One Panasonic Way, Secaucus, New Jersey 07094

Panasonic Hawaii, Inc.
320 Waiakamilo Road, Honolulu, Hawaii 96817

Matsushita Electric of Canada Ltd.
5770 Ambler Drive, Mississauga, Ontario L4W 2T3

■ CONTENTS

LOCATION OF CONTROLS 2, 3
DISASSEMBLY INSTRUCTIONS . . . . . 3 ~ 5
ALIGNMENT INSTRUCTIONS 6
ALIGNMENT POINTS. 7
BLOCK DIAGRAM. 8
DIAL CORD INSTALLATION GUIDE 9
BLOCK DIAGRAM OF IC. . . . . 9 ~ 11
PRINTED CIRCUIT BOARD WIRING VIEW
(FM/AM tuner and equalizer circuit board) 12, 13
PRINTED CIRCUIT BOARD WIRING VIEW
(Tone, main amplifier, power supply and speaker protection circuit board) 14, 15
TERMINAL GUIDE OF TRANSISTORS & IC 16
EXPLODED VIEW 17, 18
REPLACEMENT PARTS LIST
(Cabinet, chassis & packing parts). 19
REPLACEMENT PARTS LIST (Electric parts) 19, 20
SCHEMATIC DIAGRAM 21, 22
REPLACEMENT PARTS LIST
(Resistors & capacitors). 23,24

■ LOCATION OF CONTROLS

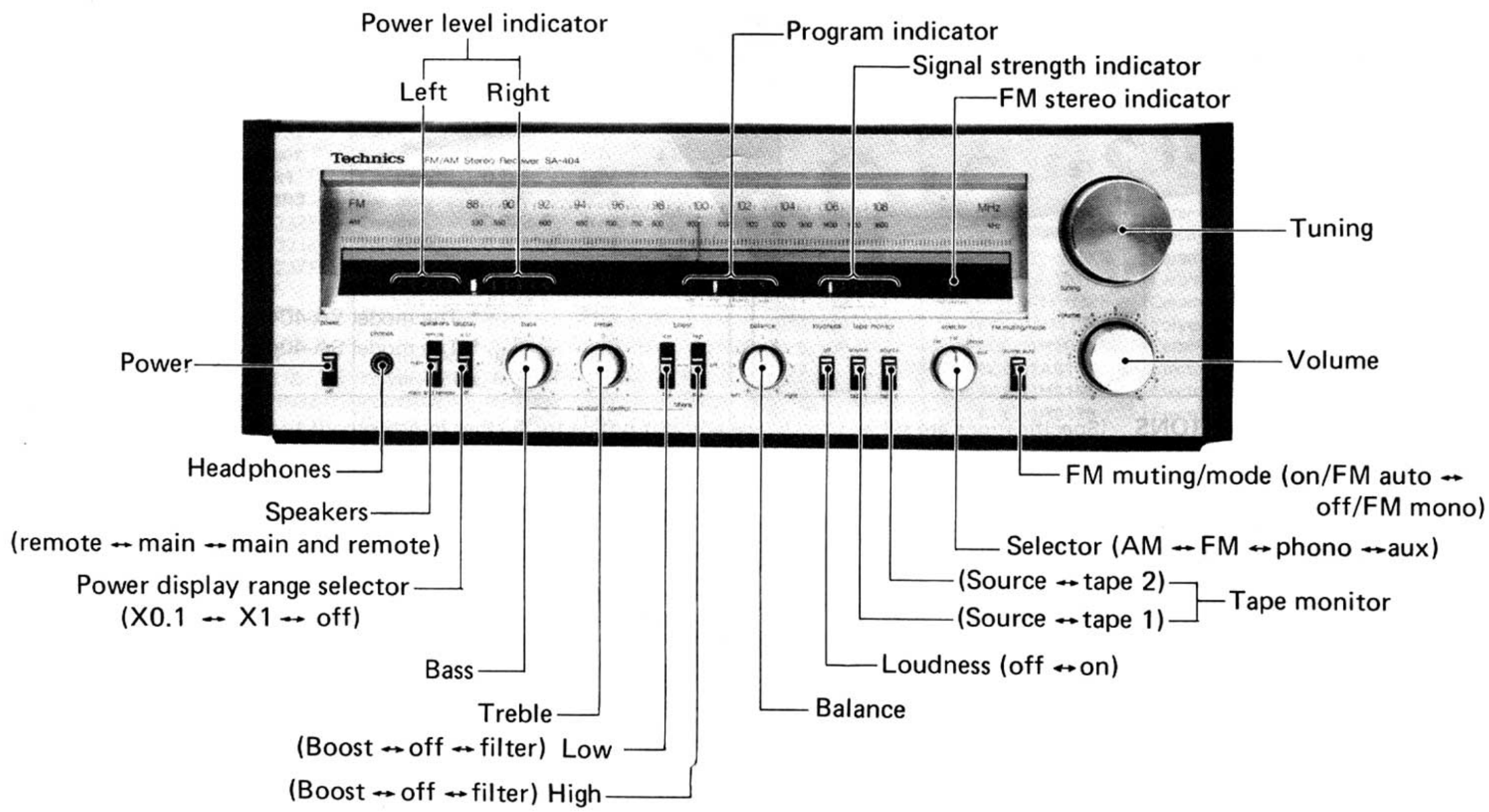

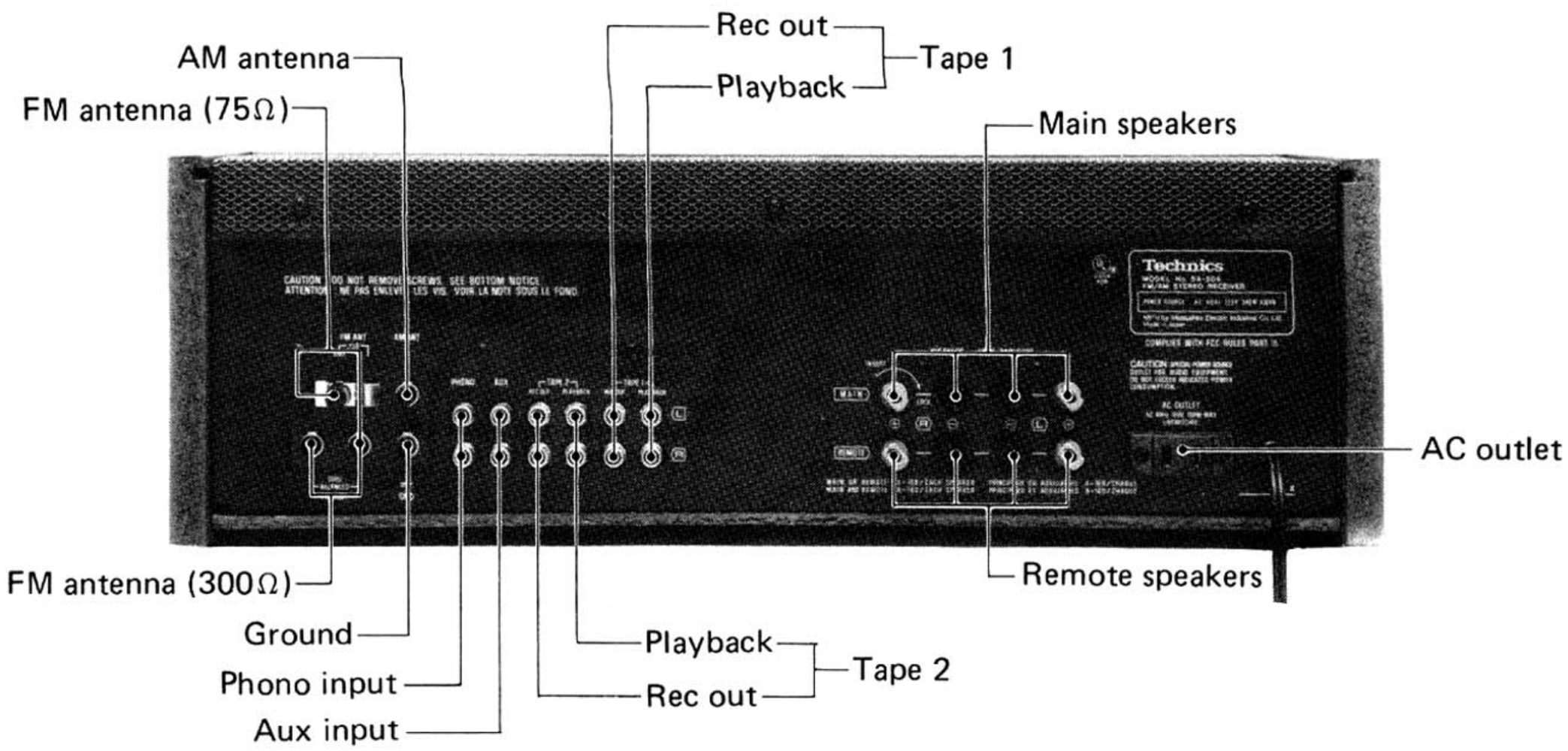

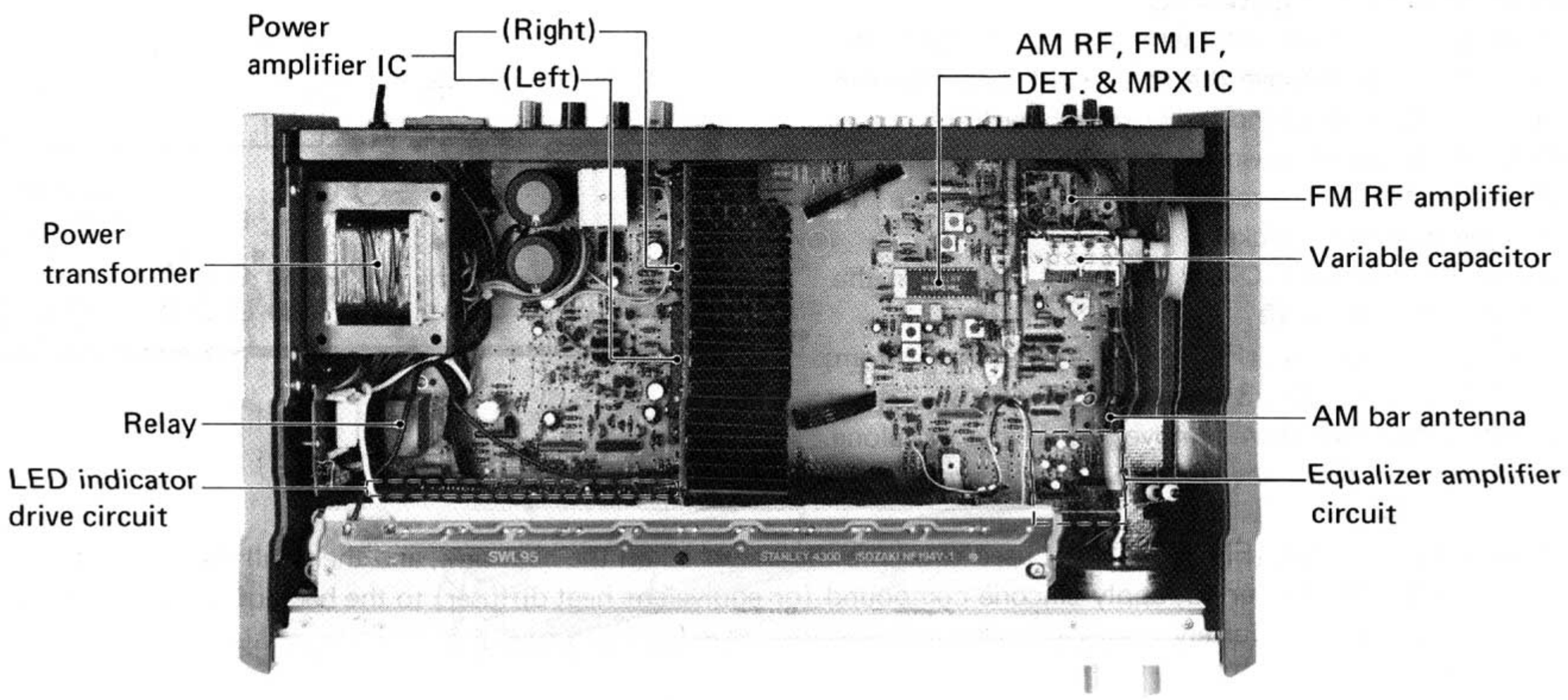

■ DISASSEMBLY INSTRUCTIONS

*** How to remove the top board**

1. Remove the 3 setscrews (Fig. 1 : ① ~ ③) holding the top board and ventilation.
2. Move the top board and ventilation slightly toward the rear of the unit (Fig. 1 : Ⓐ).

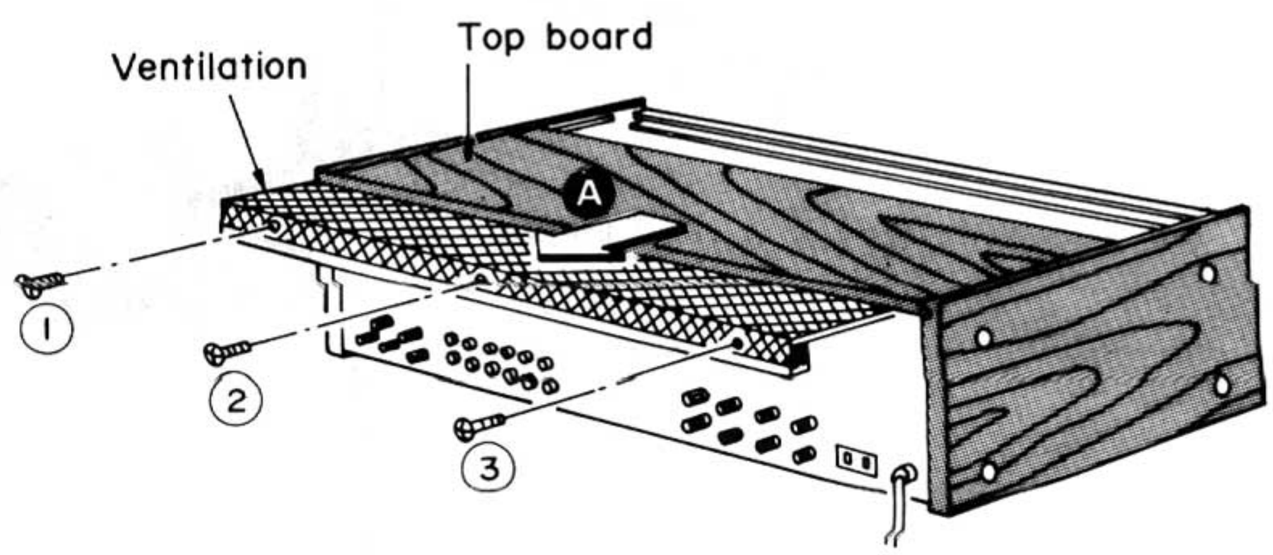

[Fig. 1]

*** How to remove the front panel and the bottom board**

1. Loosen the 4 setscrews (Fig. 2 : ④ ~ ⑦) holding the side boards.
2. Remove the 5 setscrews (Fig. 2 : ⑧ ~ ⑫) holding the front panel and remove the 2 setscrews (Fig. 3 : ⑭ , ⑮) holding the bottom board.
3. Pull the front panel outward from the front of the unit.
4. To remove the bottom board, remove the 12 setscrews (Fig. 3 : ⑬ ~ ㉔) holding the bottom board.

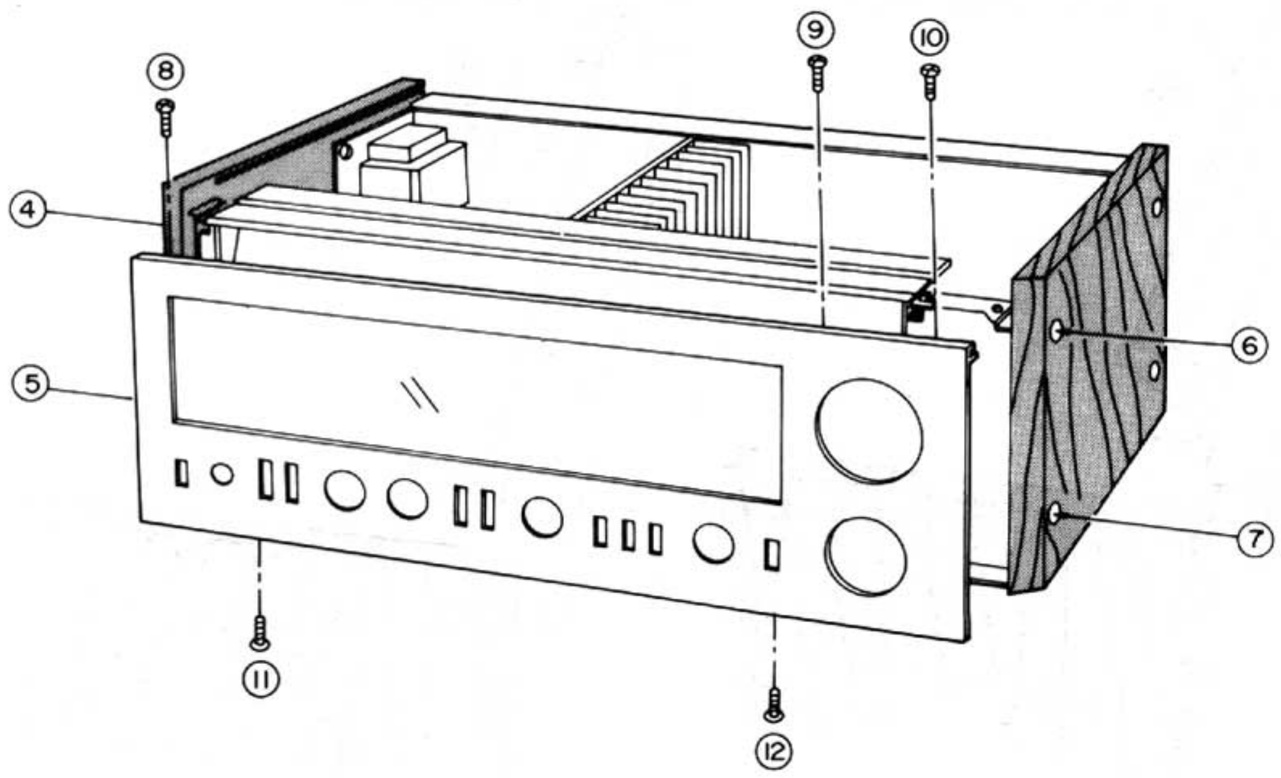

[Fig. 2]

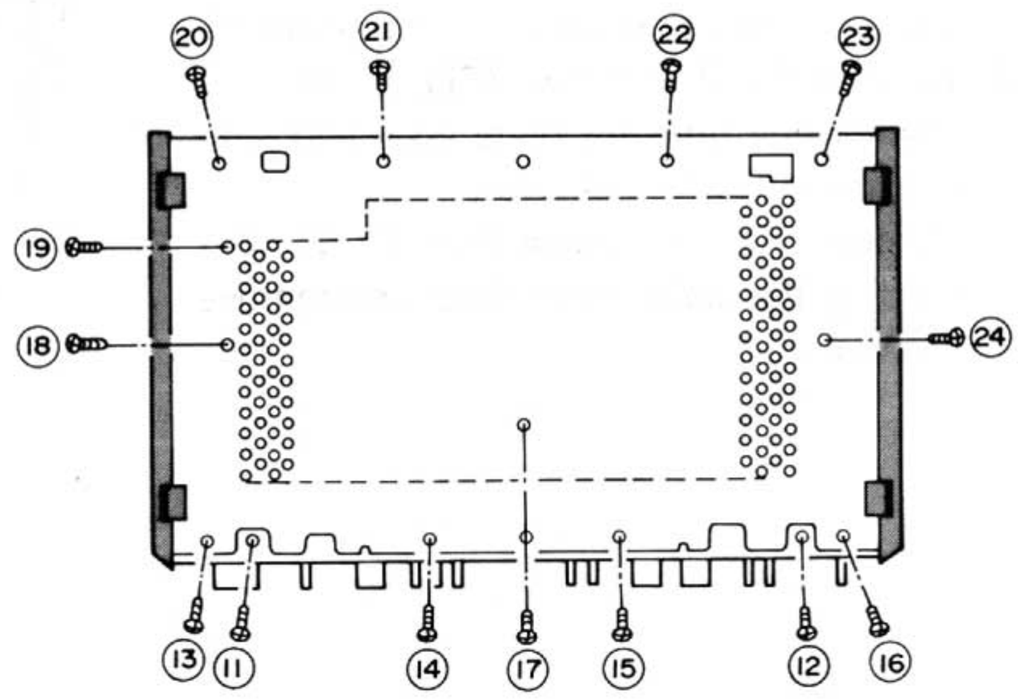

[Fig. 3]

* How to remove the power IC

1. Remove the top board and bottom board. (Refer to the sections "How to remove the top board" and "How to remove the front panel and the bottom board".)
2. Remove the solder of power IC for both Lch and Rch.
3. Remove the transistor bracket setscrew (Fig. 5 : ㉕) to detach the transistor bracket.
   Unsolder the transistor Q701 and bend it down in the direction of the arrow Ⓑ.
4. Remove the 2 setscrews (Fig. 5 : ㉖, ㉗) at the bottom of the heat sink and the 3 setscrews (Fig. 4 : ㉘ ~ ㉚) at the rear panel, and then remove the heat sink along with the power IC in the direction of the arrow Ⓒ. (Refer to Fig. 5.)
5. Remove the 2 setscrews (Fig. 5 : ㉛ , ㉜) used to secure the power IC on the heat sink, and then pull the power IC.
6. When mounting the power IC, apply silicone compound (or equivalent heat diffuser) to the back of power IC, and then follow the steps 1 ~ 5 reversely.

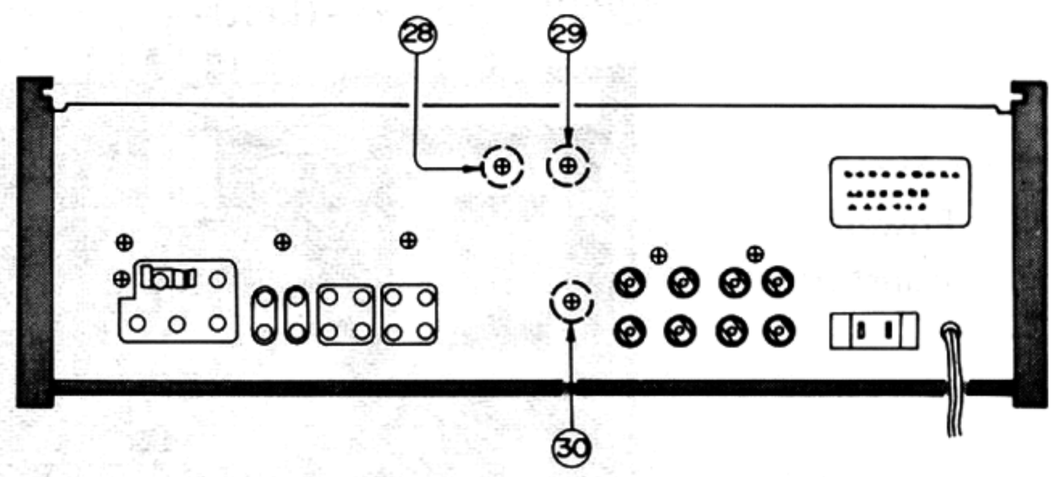

[Fig. 4]

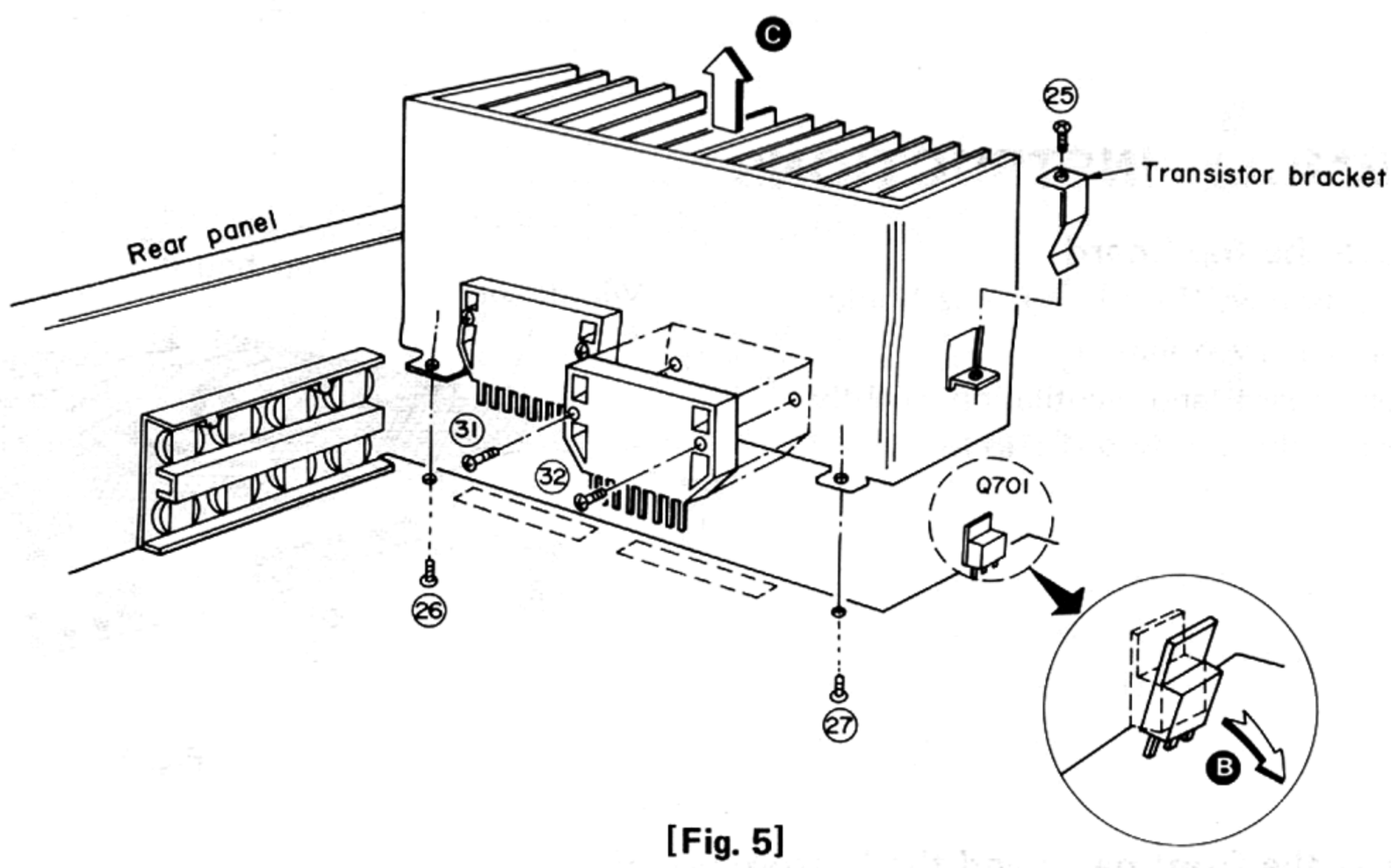

[Fig. 5]

* How to remove the LED indicator P.C.B. and LED indicator drive circuit P.C.B.

1. Remove the top board (Refer to the section "How to remove the top board.")
2. Remove the 2 setscrews (Fig. 6 : ㉝, ㉞) holding the reflector plate ass'y and remove the reflector plate ass'y.
3. Remove the 2 setscrews (Fig. 7 : ㉟, ㊱) holding the dial pointer cover and remove the dial pointer cover.

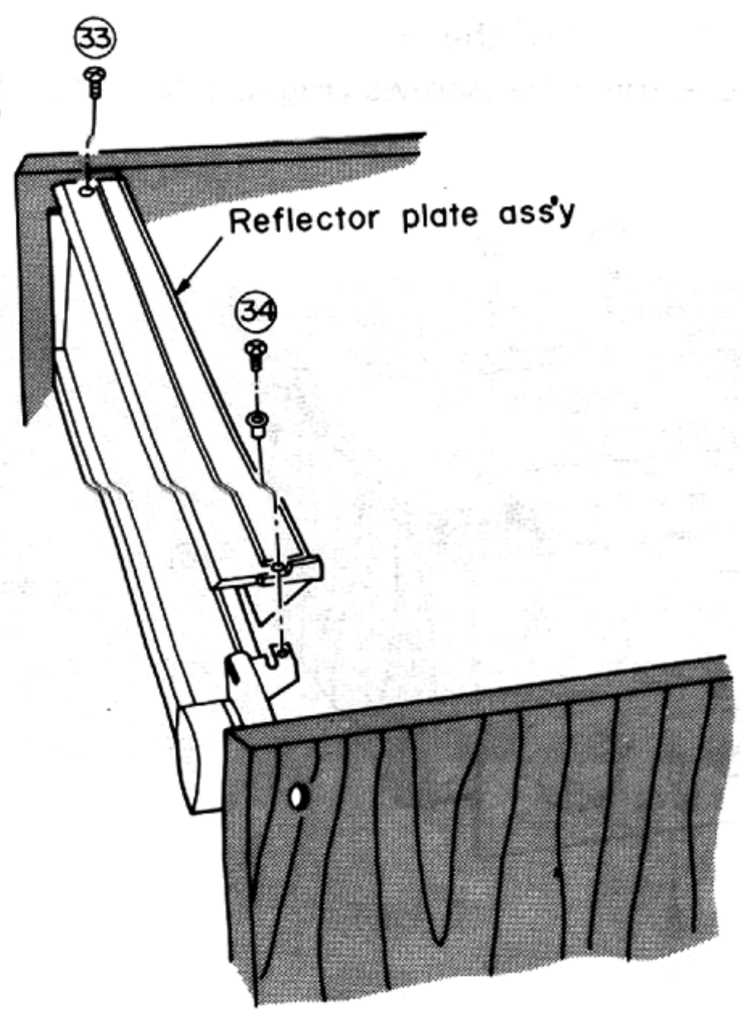

[Fig. 6]

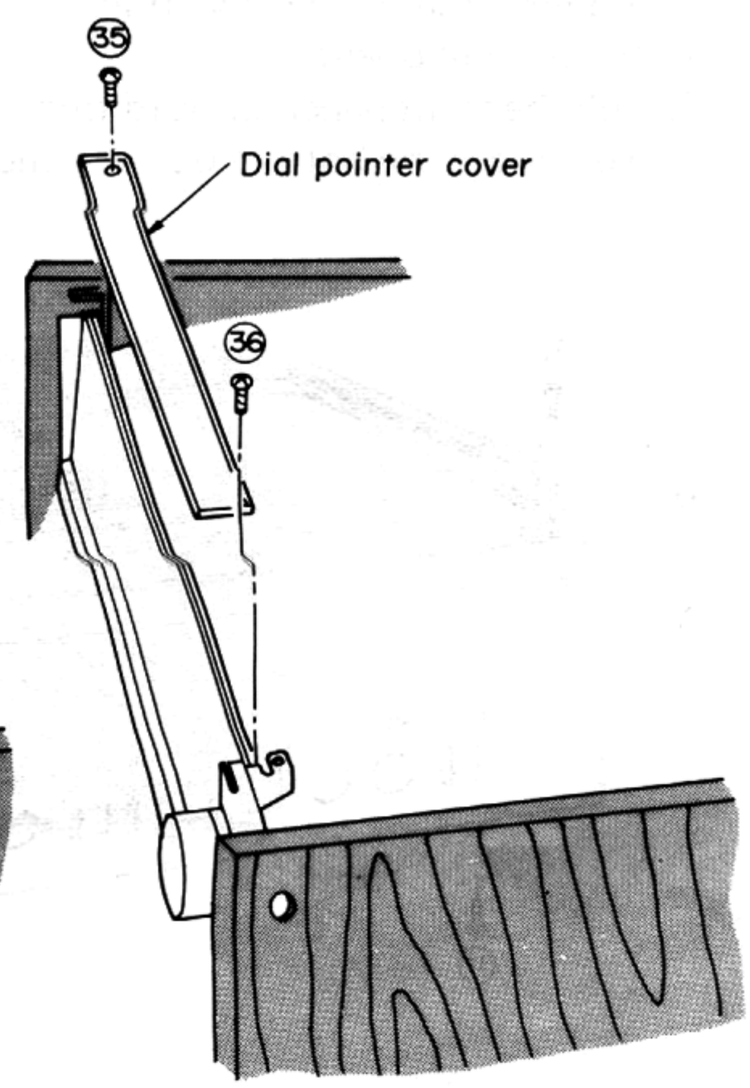

[Fig. 7]

4. Move the dial plate slightly toward the top of the unit. (Fig. 8 : Ⓓ)
5. Disconnect the dial cord and remove the 2 setscrews (Fig. 9 : ㊲, ㊳), which fasten the dial scale mirror.
   Next, raise the dial scale mirror in the direction of the arrow Ⓔ and then pull it out in the direction of the arrow Ⓕ .
   (Refer to Fig. 10.)

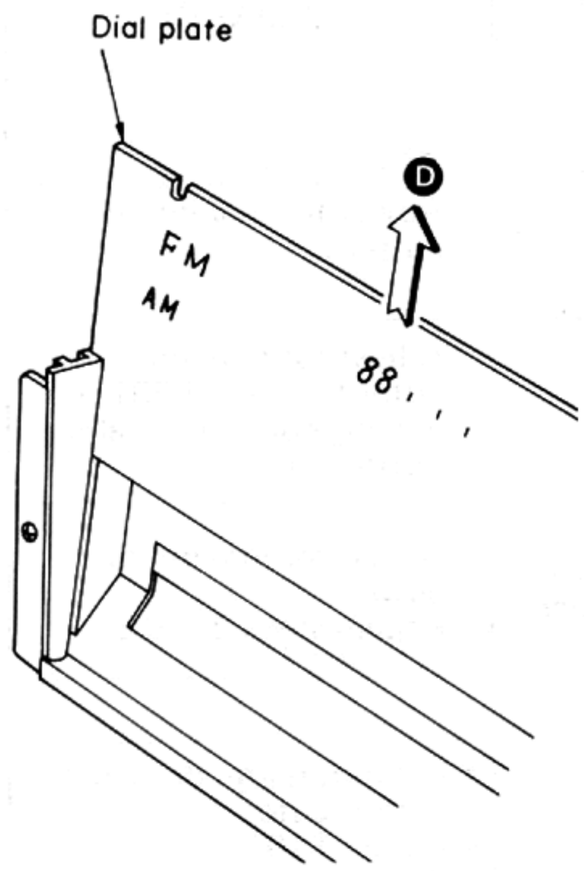

[Fig. 8]

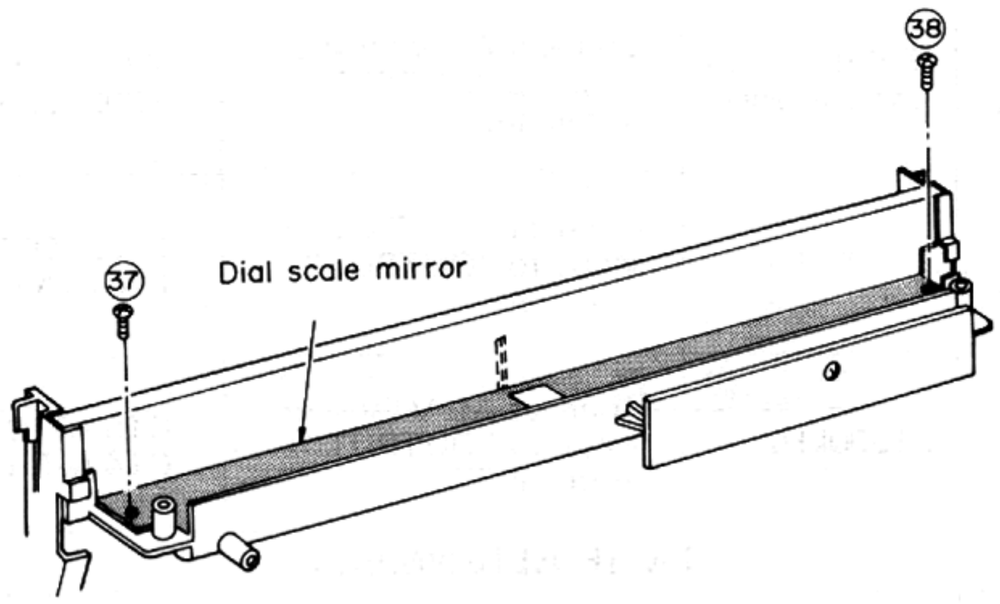

[Fig. 9]

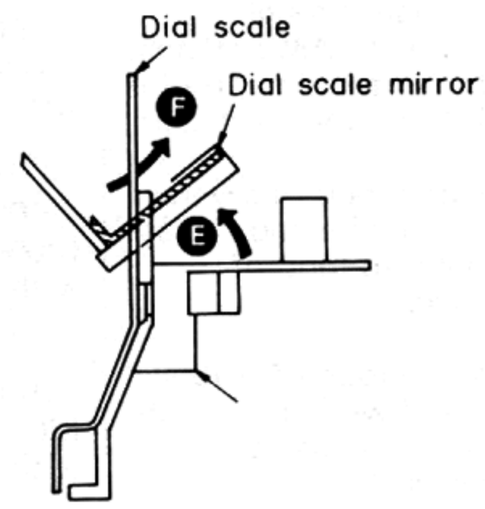

[Fig. 10]

6. Remove the 3 setscrews (Fig. 11 : ㊴ ~ ㊶) which fasten the dial scale ass'y and then detach the dial scale ass'y in the direction of the arrow Ⓖ (Fig. 11.)
7. The LED indicator P.C.B. is secured with the lug projected from the LED frame. So, bend the lug down (Ⓗ in Fig. 12) to remove the LED indicator P.C.B.
8. Remove the setscrew (Fig. 12 : ㊷) which fastens the LED indicator drive circuit P.C.B. Then the LED indicator drive circuit P.C.B. can be detached.

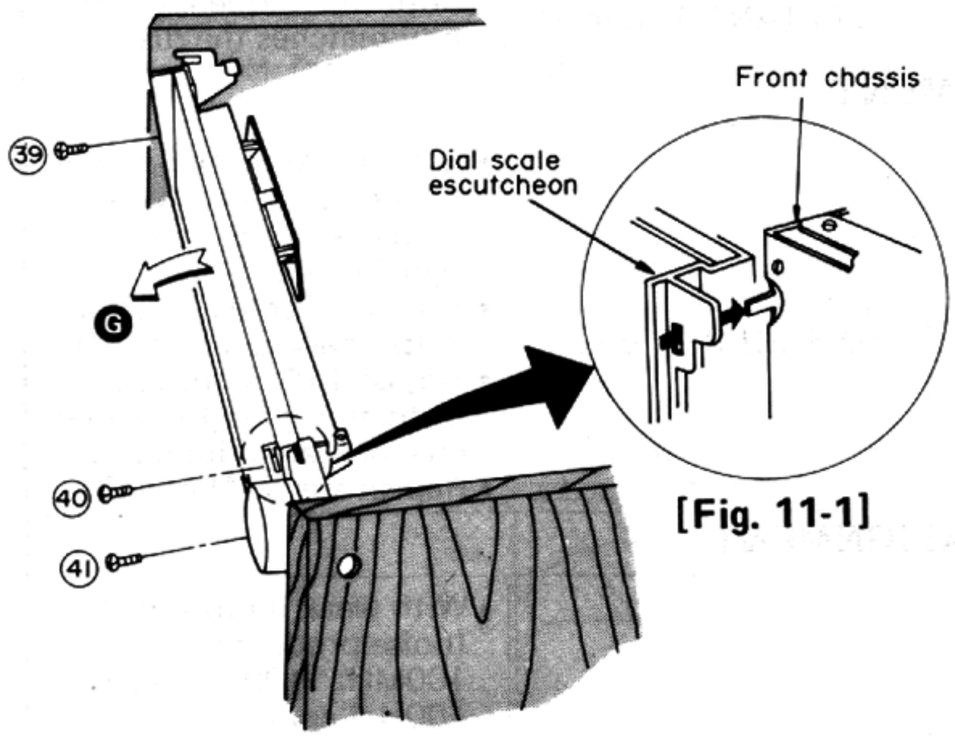

[Fig. 11-1]

[Fig. 11]

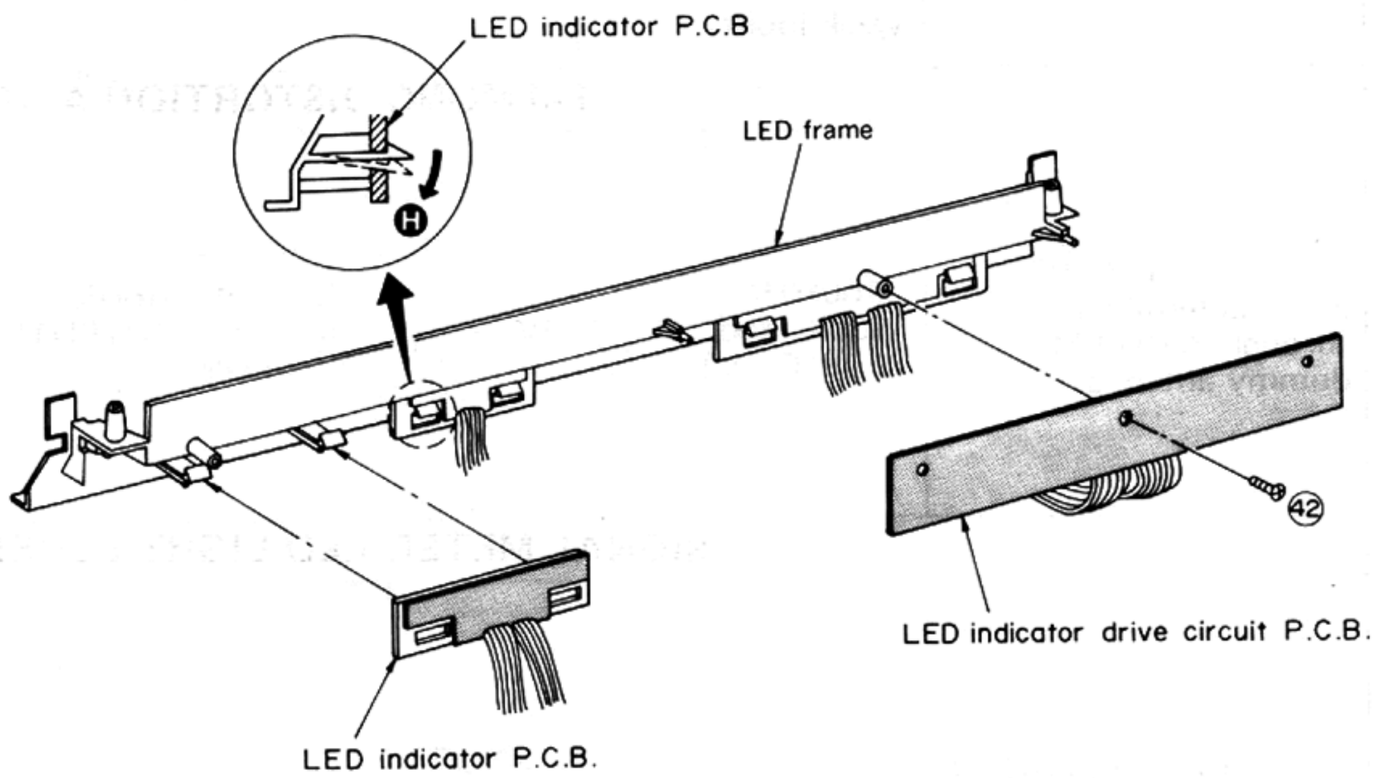

[Fig. 12]

9. When re-assembling, reversely follow the steps 1 through 8. To install the dial scale, completely fit the LED frame in the grooves of the dial scale and then install the right and left dial scale escutcheons (Fig. 13).
   Next, completely fit the right and left dial scale escutcheons onto the lugs projected from the front chassis and secure them with setscrews (Fig. 11-1).

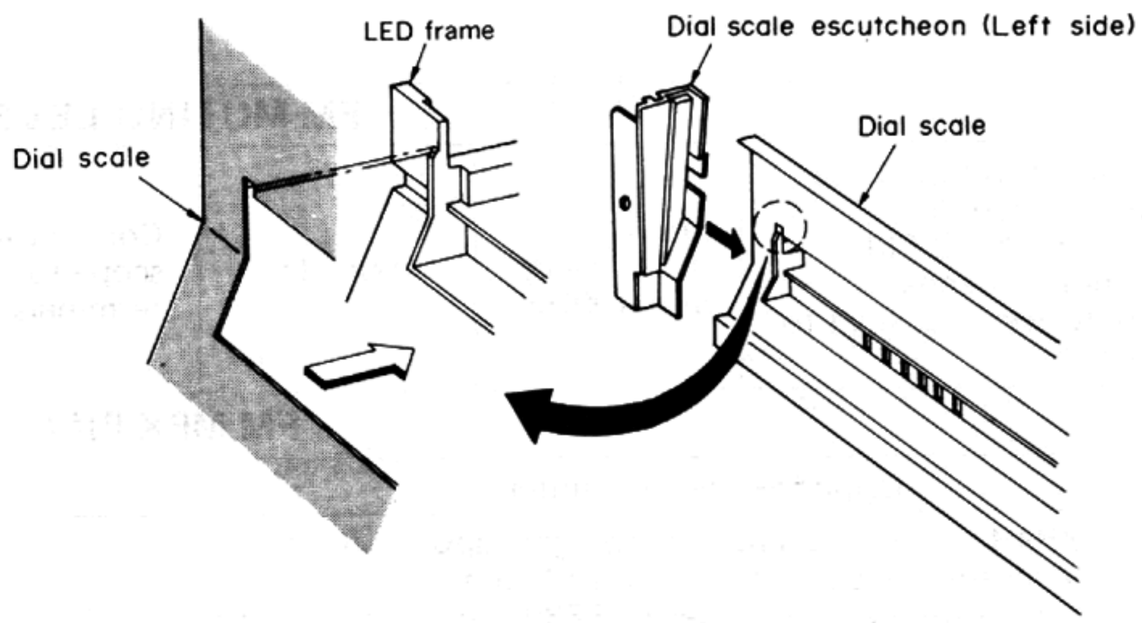

[Fig. 13]

■ ALIGNMENT INSTRUCTIONS

Notes:

1. Band selector switch . . . . . {AM (AM Alignment) / FM (FM Alignment)}
2. FM muting & mode switch . . . off/mono
3. Fix the bottom board to chassis before adjustment.
4. Maintain line voltage at 120 volts.
5. 300ΩFM dummy antenna
6. Output of signal generator should be no higher than necessary to obtain an output reading.

	AM/FM SIGNAL GENERATOR		DIAL SETTING	INDICATOR (VTVM or SCOPE)	ADJUSTMENT POINTS	REMARKS
	CONNECTION	FREQUENCY				
	AM ALIGNMENT					
1	High side through 0.001μF to **AM** antenna trimmer terminal. (point A). Common to chassis.	450kHz (30% Mod. with 400Hz)	Point of non-inter-ference	Connect AC VTVM or scope to "OUTPUT" terminals.	T201 (1st IFT) T202 (2nd IFT)	Adjust for maximum output.
2	Fashion loop of several turns of wire and radiate signal into loop of receiver	600kHz (30% Mod. with 400Hz)	600kHz	Connect AC VTVM or scope to "OUTPUT" terminals.	L202 (OSC Coil) L201 (ANT Coil)	Adjust for maximum output, Adjust L201 by moving coil bobbin along ferrite core.
3	Fashion loop of several turns of wire and radiate signal into loop of receiver.	1500kHz (30% Mod. with 400Hz)	1500kHz	Connect AC VTVM or scope to "OUTPUT" terminal.	CT5 (OSC Trimmer) CT4 (ANT Trimmer)	Adjust for maximum output. Repeat steps 2 and 3.
	FM IF ALIGNMENT					
4		No-Signal	Point of non-inter-ference	Connect DC VTVM to TP102, TP103 terminals. (Refer to fig. 14)	T101 (DISCRI IFT) A	• FM muting/mode switch to "on/auto" position. • Adjust T101 (A) core so that voltage measured in signal mode is 0V in 300mV range.
	FM RF ALIGNMENT					
5	Connect to FM 300Ω antenna terminal through 300Ω FM dummy antenna.	90MHz (100% Mod. with 400Hz) weak input	90MHz	Connect scope to "OUTPUT" terminal.	L5 (OSC Coil) L3 (RF DET Coil) L1 (ANT Coil)	• Add weak input so that noise is included in the output wave form. • Make the adjustment so that the output wave form is vertically symmetrical. (Fig. 15) • Repeat the steps 5 and 6 until the frequency corre ctly matches the dial scale.
6		106MHz (100% Mod. with 400Hz) weak input	106MHz	Connect scope to "OUTPUT" terminal.	CT3 (OSC Trimmer) CT2 (RF DET Trimmer) CT1 (ANT Trimmer)	
	FM MONO DISTORTION ALIGNMENT					
7	Connect to FM 300Ω antenna terminal through 300Ω FM dummy antenna.	100MHz (100% Mod. with 400Hz)	100MHz	Connect distortion meter to "OUTPUT" terminals.	T102 (DISCRI IFT) B	• Set the FM muting/mode switch to "on/auto" and then check step 4 in no signal mode. • If it is deflected, re-adjust A (primary side) of T101. • Adjust T102 core so that distortion of right and left channels are minimized. • Repeat steps (4) and (7).
	SIGNAL METER LED LIGHT LEVEL ALIGNMENT					
8	Connect to FM 300Ω antenna terminal through 300Ω FM dummy antenna.	100MHz (100% Mod. with 400Hz)	100MHz	Connect scope to "OUTPUT" terminal	VR102 (LED LIGHT LEVEL)	• With weak input signal (noise produced) at 100MHz (100% Mod. with 400Hz) applied, make tuning so that the upper and lower wave forms are symmetrical. • With the input set at 45dB (signal generator at 57dB), adjust VR102 so that all the signal strength LED's light up.
	FM MUTING LEVEL ALIGNMENT					
9	Connect to FM 300Ω antenna terminal through 300Ω FM dummy antenna. Apply 16dB (6.3μV) to receiver.	100MHz (100% Mod. with 400Hz)	100MHz	Connect AC VTVM or scope to "OUTPUT" terminals.	VR101 (MUTING LEVEL)	FM muting/mode switch to "on/auto". Adjust so that output can be obtained.
	FM MPX PILOT ALIGNMENT					
	Using frequency counter			Using alternate system		
10	**1** 100MHz Non-modulated mono signal applied to set. **2** FM muting/mode switch to "on/FM auto". **3** Connect frequency counter to **TP301** through resistor (100kΩ). **4** Adjust **VR301** to 19kHz, ± 30Hz.			**1** Apply stereo signal from generator or stereo station to tuner. **2** Adjust **VR301** until stereo indicator lights up. Cement arm of **VR301** as shown in fig. 16.		

SEPARATION ALIGNMENT	
PREPARATIONS	ADJUSTING PROCEDURE
11 **1** Add 100MHz, 1kHz, 30% pilot 10% modulation, 60dB stereo signal to the receiver. **2** Connect AC VTVM or scope to output terminal through low pass filter. Refer to fig. 17.	**1** FM muting/mode switch to "on/auto". **2** Adjust **VR302** so that **R** output is minimized when stereo modulator is in **L** (Lch.modulation) mode and that **L** output is minimized in **R** mode.

■ ALIGNMENT POINTS

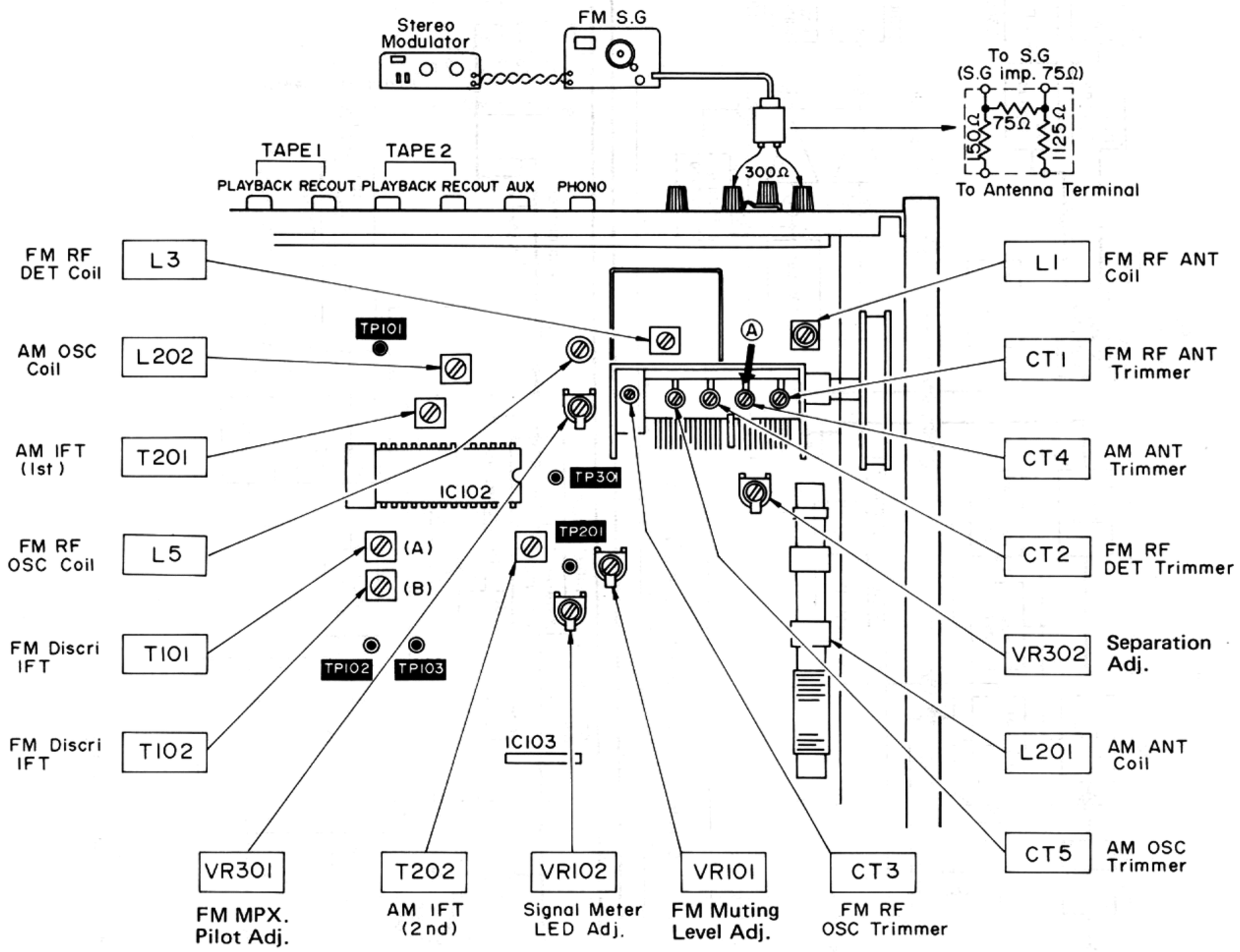

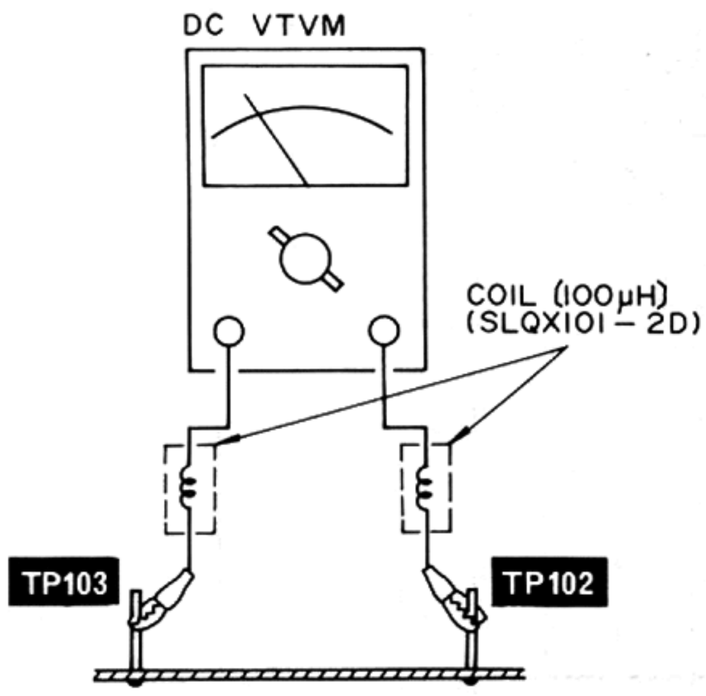

[Fig. 14]

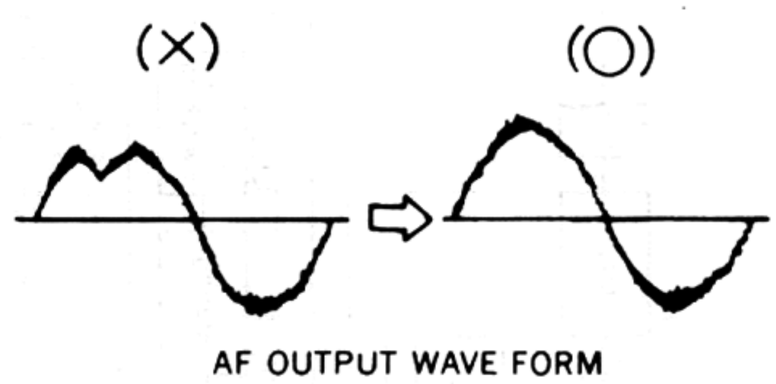

AF OUTPUT WAVE FORM

[Fig. 15]

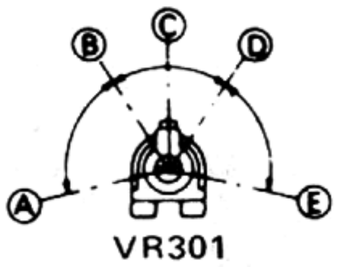

VR301

A – B, D – E: Stereo OFF Position.
B – D: Stereo ON Position (Indicator Lighting).
C: Adjust Point of Pilot Circuit.

[Fig. 16]

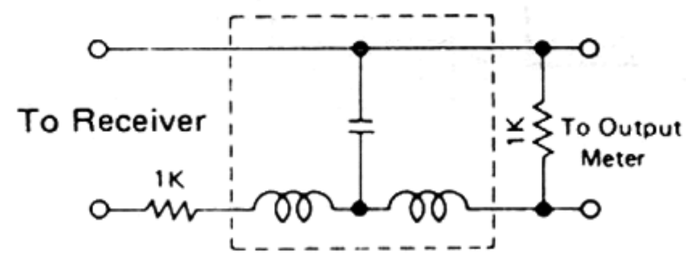

Low Pass Filter
(fc=15kHz ~ 19kHz)

[Fig. 17]

■ BLOCK DIAGRAM

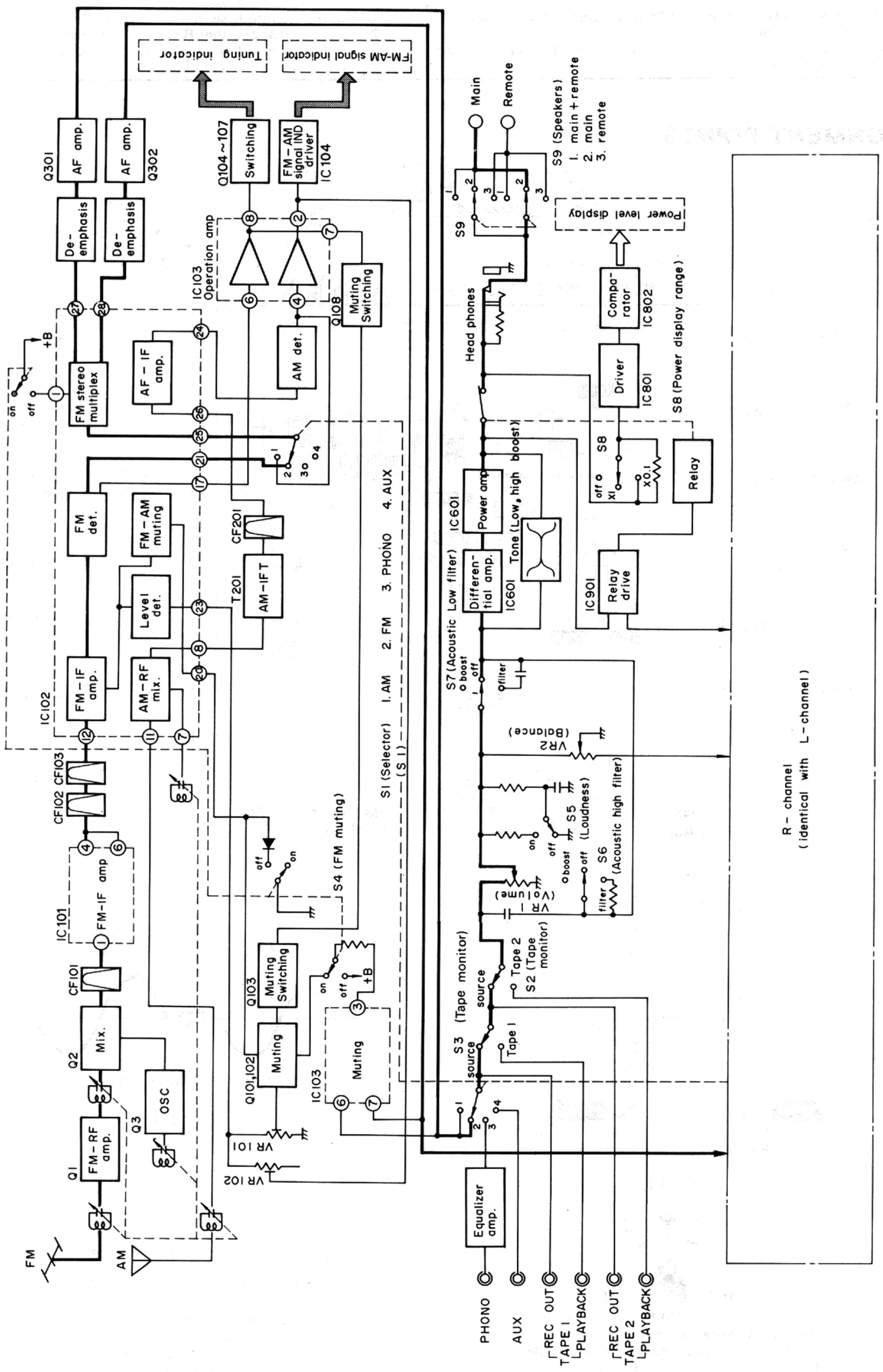

■ DIAL CORD INSTALLATION GUIDE

* For threading a fresh cord, proceed as follows.

1. Prepare a fresh cord more than 180cm (70-15/16") in length.
2. Bring the variable capacitor into a state where the drum is completely turned to the right (maximum capacity and lowest frequency for the variable capacitor.)
3. Direct the cord in the order from 1 to 10.
4. Stretch the cord in such a tension as the spring length is elongated by 1.5 times that of the original state.
5. Fix the knot of the cord with the adhesive.

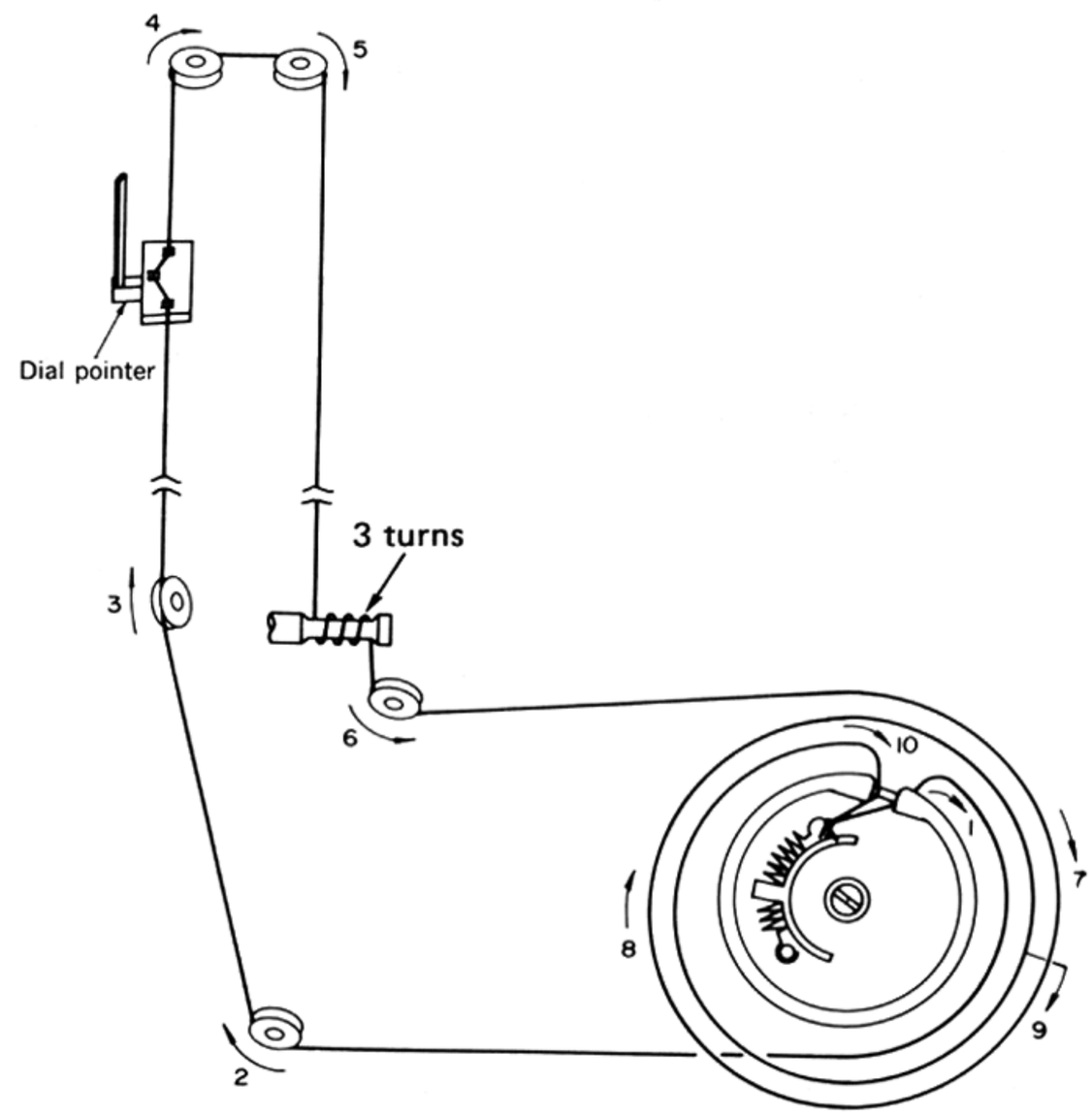

■ BLOCK DIAGRAM OF IC

* This is the basic block diagram of the inside circuit of IC. In an actual circuit, there may be sometimes idle terminals or some different functions other than the basic circuit.

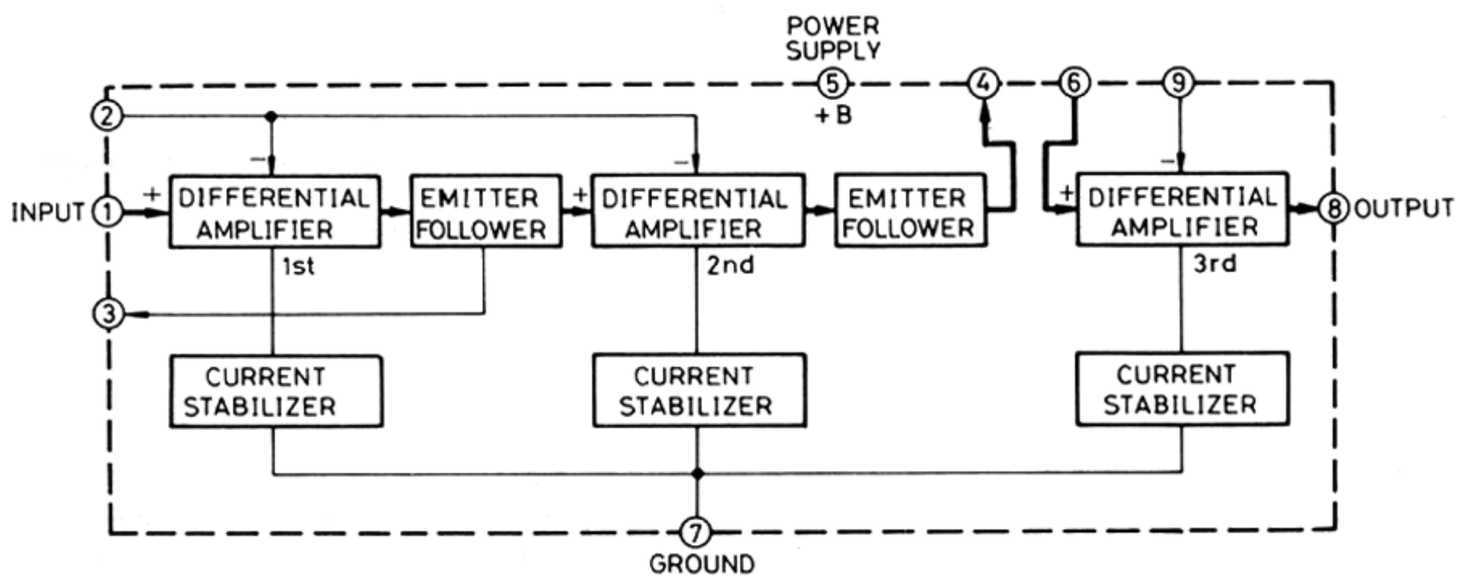

IC101 (AN278)
FM IF amplifier

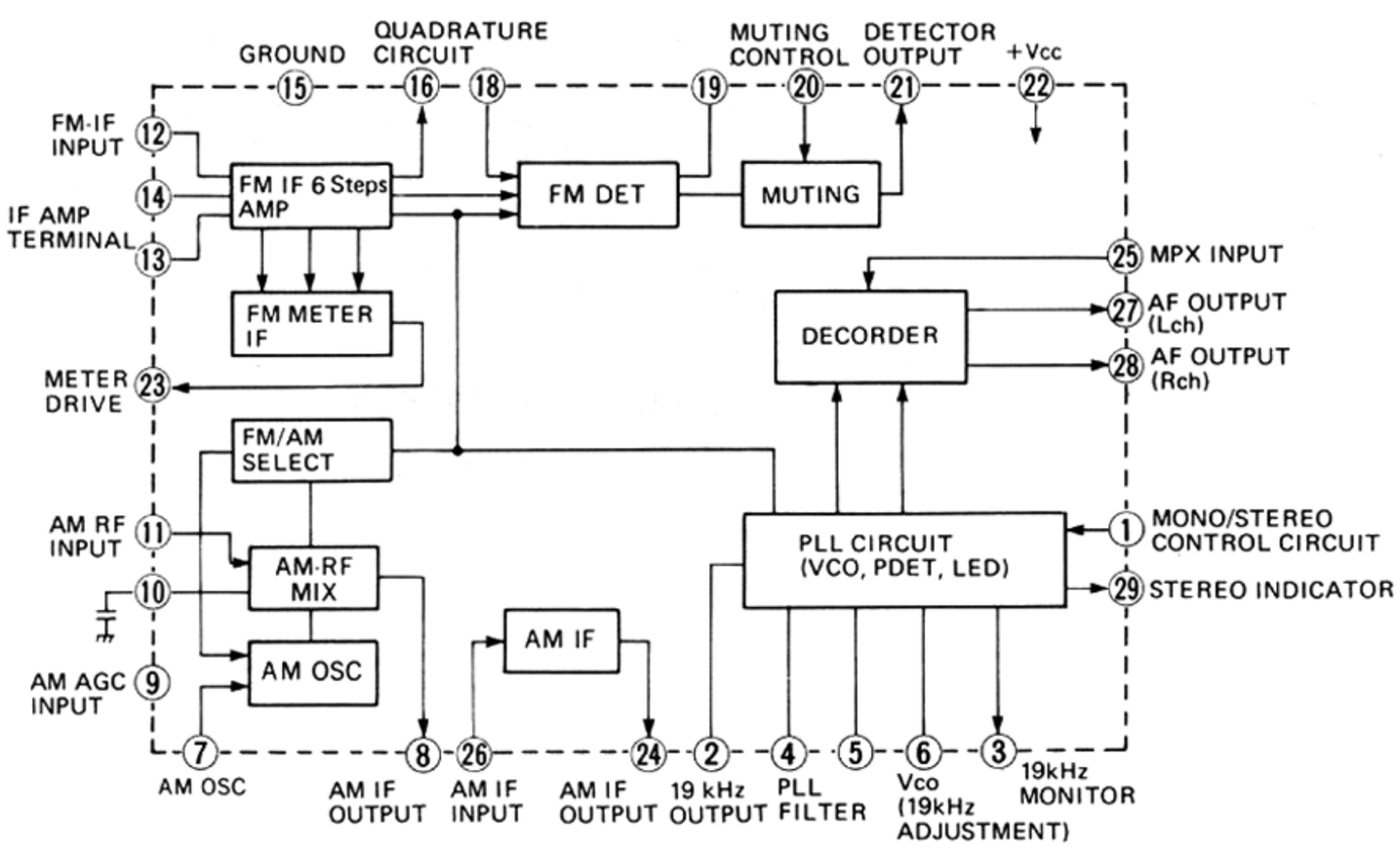

IC102 (AN7001ST)
AM converter, FM IF amplifier
FM detector & stereo decoder
(MPX)

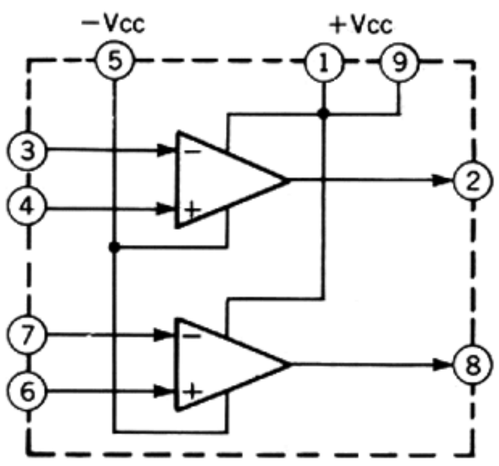

IC103, 801 (AN6551)
Operation amplifier

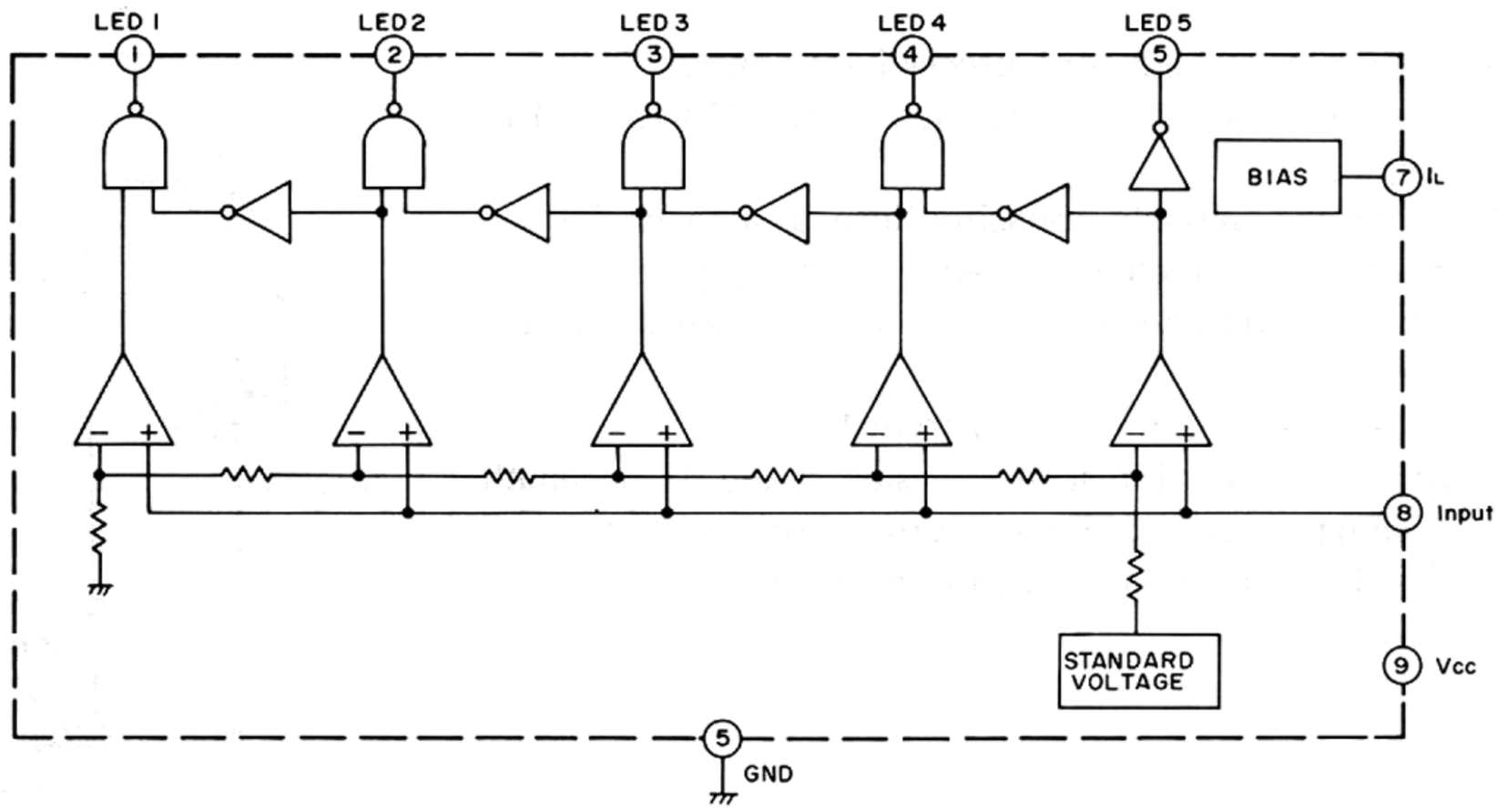

IC104 (AN6876)
FM AM signal indicator driver

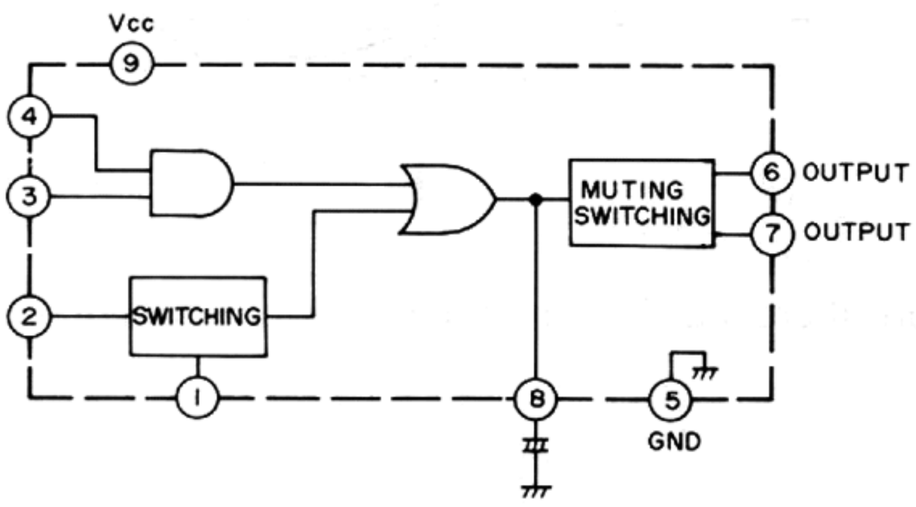

IC301 (AN6136)
AF muting

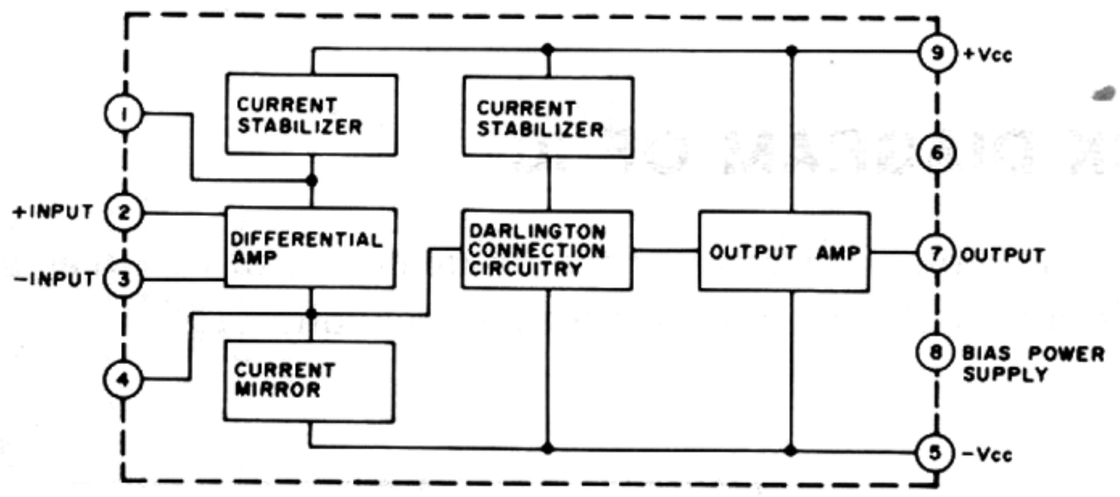

IC401, 402 (SVITA7322P)
Equalizer amplifier

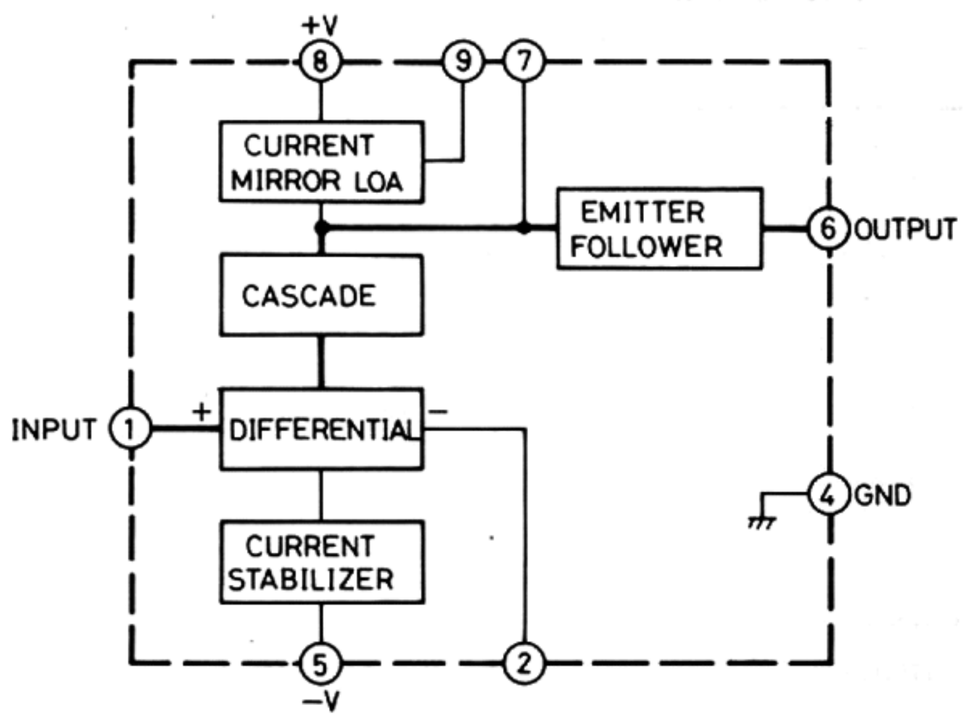

IC601, 602 (AN7060F)
Differential amplifier

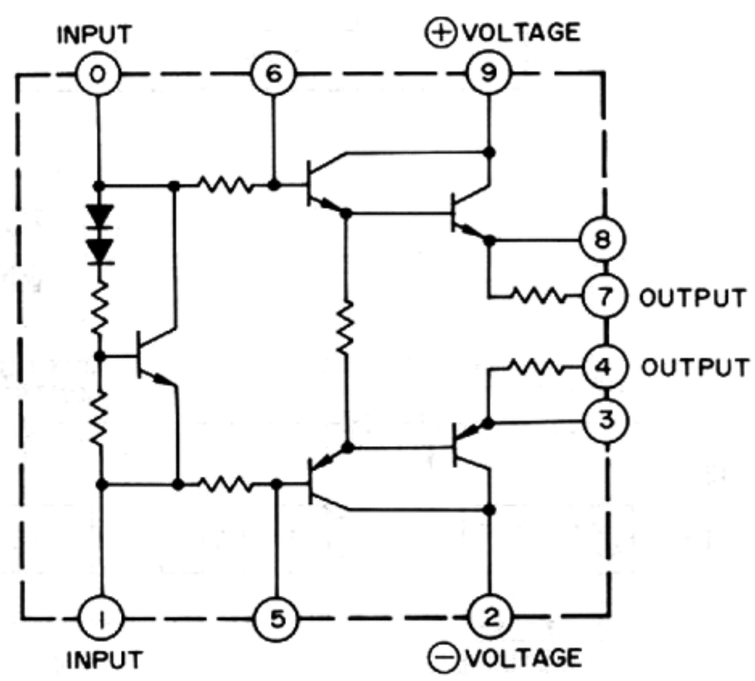

IC603, 604 (SVISTK1050K)
Power amplifier

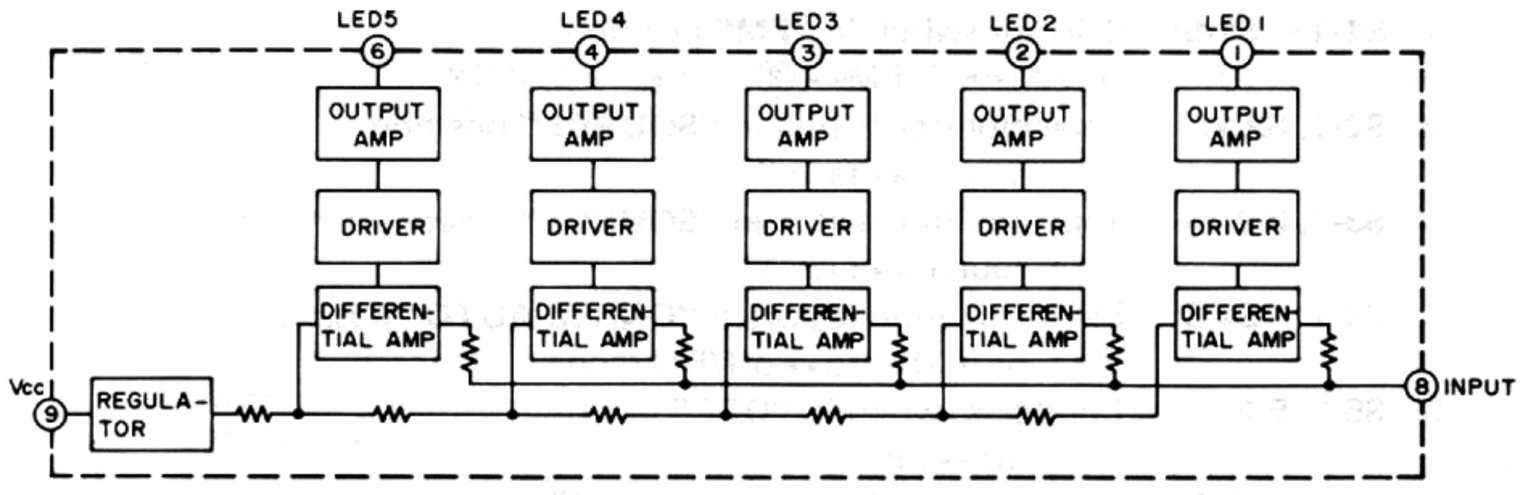

IC802, 803 (AN6875)
LED comparator

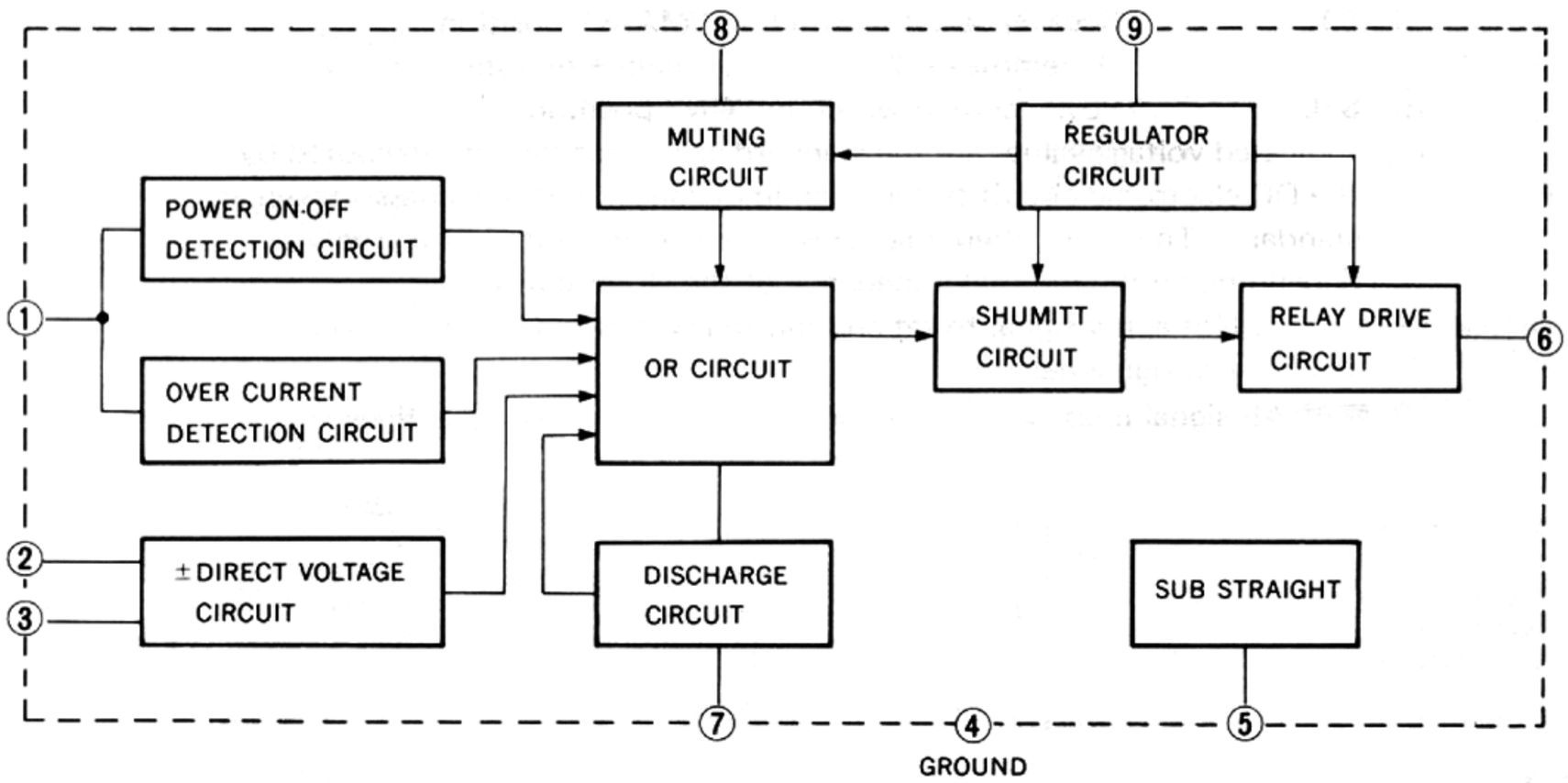

IC901 (SVITA7317P)
Speaker protection operation amplifier

■ PRINTED CIRCUIT BOARD WIRING VIEW

(FM/AM tuner and equalizer circuit board)

Earth (Ground) Lines

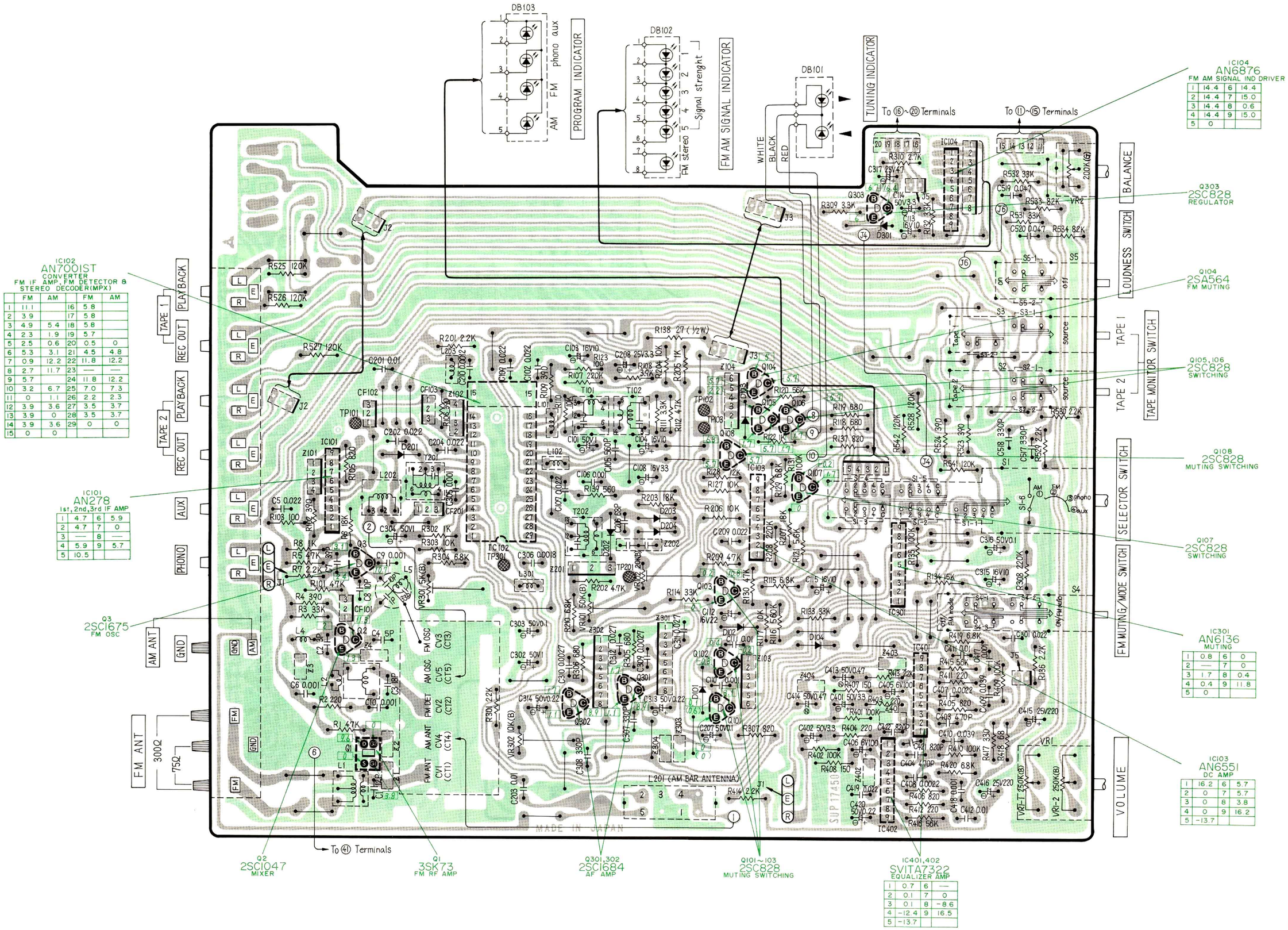

IC102			
	FM	AM	
1	11.1		16
2	3.9		17
3	4.9	5.4	18
4	2.3	1.9	19
5	2.5	0.6	20
6	5.3	3.1	21
7	0.9	12.2	22
8	2.7	11.7	23
9	5.7		24
10	3.2	6.7	25
11	0	1.1	26
12	3.9	3.6	27
13	3.9	0	28
14	3.9	3.6	29
15	0	0	

IC101			
1	4.7	6	5.9
2	4.7	7	0
3	—	8	—
4	5.9	9	5.7
5	10.5		

IC104			
1	14.4	6	14.4
2	14.4	7	15.0
3	14.4	8	0.6
4	14.4	9	15.0
5	0		

IC301			
1	0.8	6	0
2	—	7	0
3	1.7	8	0.4
4	0.4	9	11.8
5	0		

IC103			
1	16.2	6	5.7
2	0	7	5.7
3	0	8	3.8
4	0	9	16.2
5	-13.7		

IC401, 402			
1	0.7	6	—
2	0.1	7	0
3	0.1	8	-8.6
4	-12.4	9	16.5
5	-13.7		

■ PRINTED CIRCUIT BOARD WIRING VIEW

(Tone, main amplifier, power supply and speaker protection circuit board)

Earth (Ground) Lines

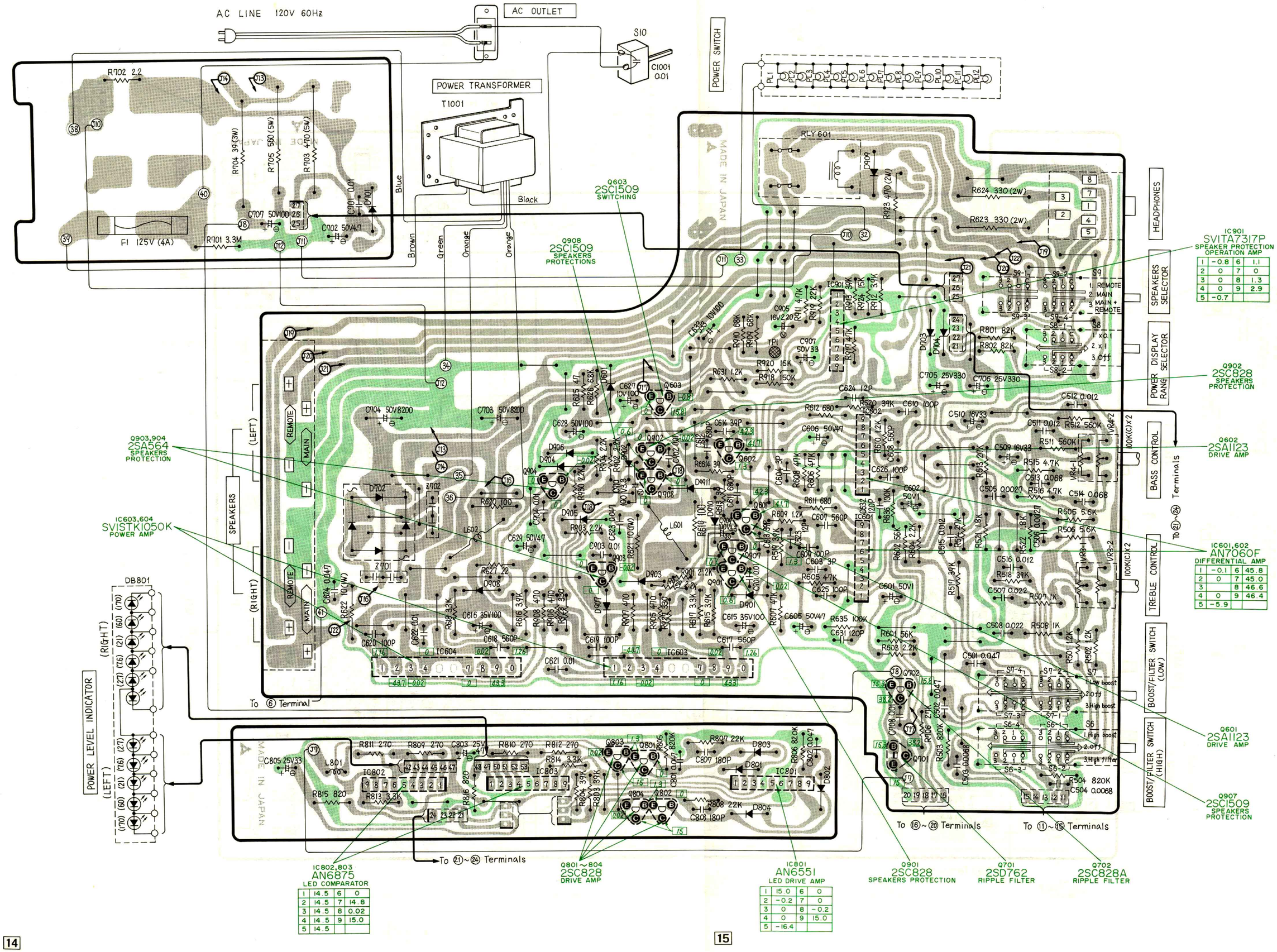

1	-0.8	6	1.1
2	0	7	0
3	0	8	1.3
4	0	9	2.9
5	-0.7		

1	-0.1	6	45.8
2	0	7	45.0
3		8	46.6
4	0	9	46.4
5	-5.9		

1	14.5	6	0
2	14.5	7	14.8
3	14.5	8	0.02
4	14.5	9	15.0
5	14.5		

1	15.0	6	0
2	-0.2	7	0
3	0	8	-0.2
4	0	9	15.0
5	-16.4		

Notes:

1. **S1-1 ~ S1-6:** Selector switch in **"FM"** position.
   ① AM ↔ ② FM ↔ ③ phono ↔ ④ AUX
2. **S2-1, S2-2:** Tape monitor switch in **"SOURCE"** position.
   source ↔ tape 2
3. **S3-1, 3-2:** Tape monitor switch in **"SOURCE"** position.
   source ↔ tape 1
4. **S4-1 ~ S4-3:** FM muting/mode switch **"ON/FM AUTO"** position.
   on/FM auto ↔ off/FM mode
5. **S5-1, 5-2:** Loudness switch in **"OFF"** position.
   off ↔ on
6. **S6-1 ~ S6-4:** Boost/filter switch (high) in **"OFF"** position
   ① high boost ↔ ② off ↔ ③ high filter
7. **S7-1 ~ S7-4:** Boost/filter switch (low) in **"OFF"** position.
   ① low boost ↔ ② off ↔ ③ low filter
8. **S8:** Power display range selector switch in **"X1"** position.
   ① X0.1 ↔ ② X1 ↔ ③ off
9. **S9:** Speaker selector switch in **"MAIN"** position.
   ① remote ↔ ② main ↔ ③ main + remote
10. **S10:** Power source switch in **"ON"** position.
11. Indicated voltage values are the standard values for the unit measured by the DC electronic circuit tester (high-impedance) with the chassis taken as standard. Therefore, there may exist some errors in the voltage values, depending on the internal impedance of the DC circuit tester.
    ▭ Not apply signal to set and muting switch to OFF condition.
    AM signal reception.
12. AF signal lines ⇨ FM signal lines ➡ AM signal lines.

Shorting Switch

This unit uses a shorting switch. As illustrated below, the circuit is shorted to the next circuit without being opened. In the circuit diagram, the shaded area represents the common terminal.

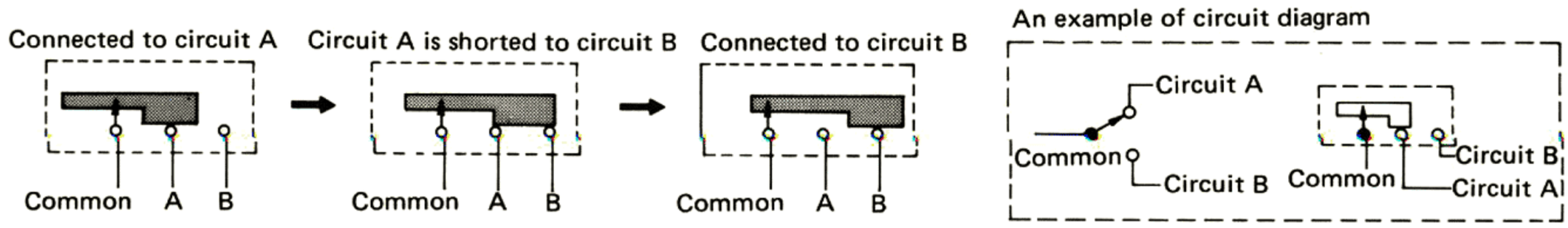

■ TERMINAL GUIDE OF TRANSISTOR AND IC

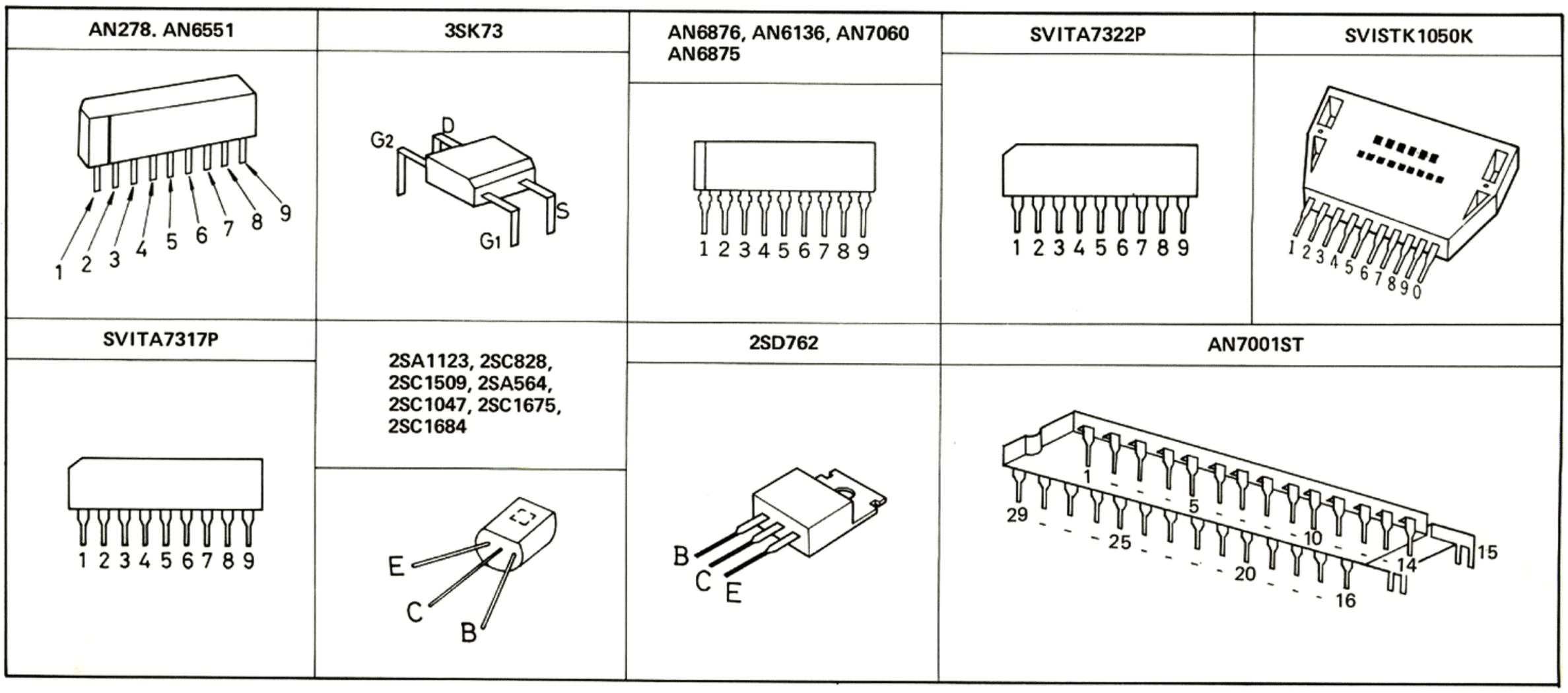

■ EXPLODED VIEW

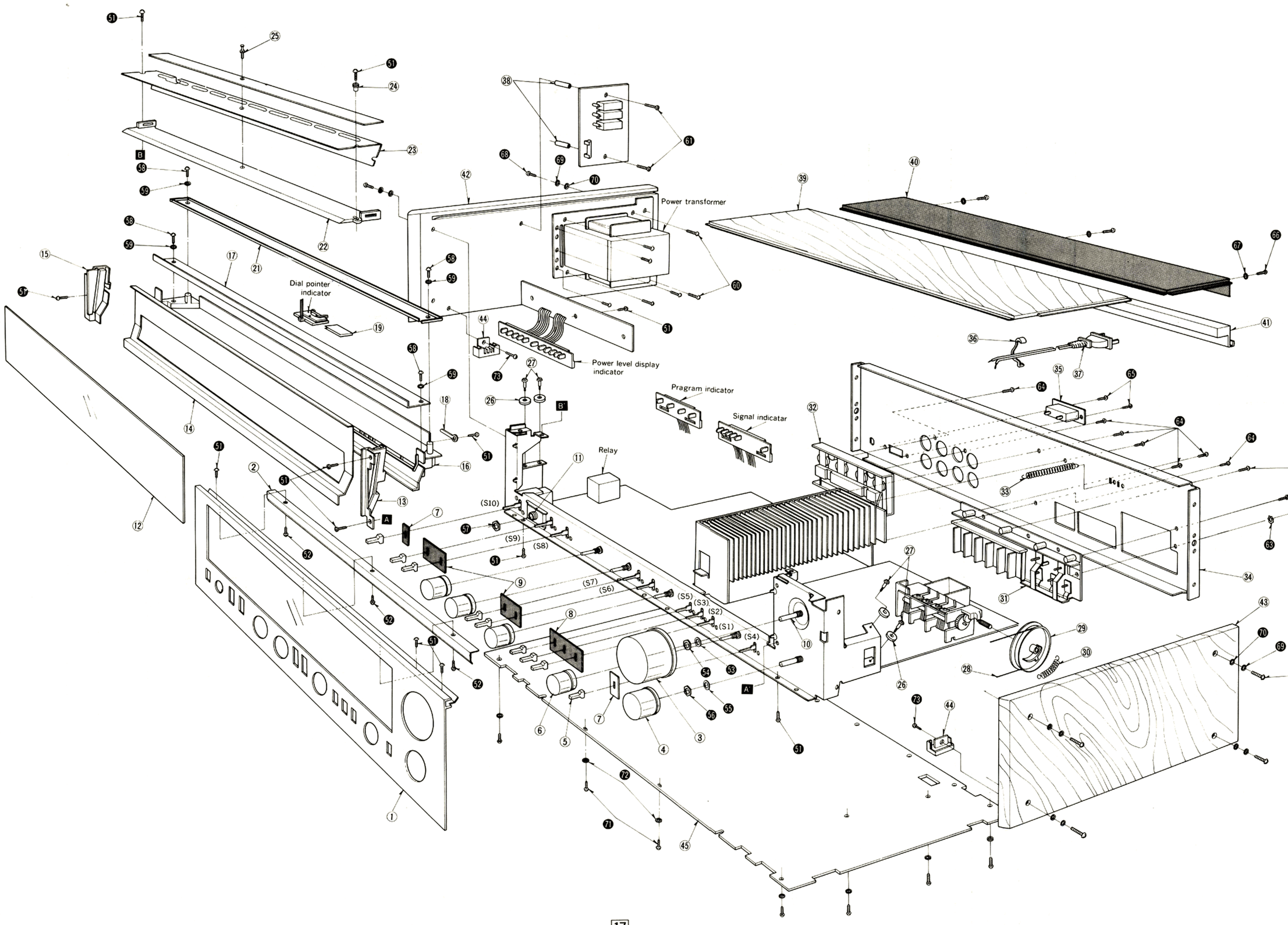

■ REPLACEMENT PARTS LIST ..... Cabinet, Chassis and Packing Parts

NOTES: 1. Part numbers are indicated on most mechanical parts Please ust this part number for parts orders.
2. ⚠ indicates that only parts specified by the manufacturer be used for safety.
3. (M) is available in U.S.A. (MC) is available in Canada.

Ref. No.		Part No.	Part Name & Description
			CABINET and CHASSIS PARTS
1		SGWA404M	Panel, Front Ass'y
2		SDH493	Bracket, Front Panel
3		SBN879	Knob, Tuning
4		SBN883	Knob, Volume
5		SBD29	Knob, Lever Switch
6		SBN887	Knob, Selector, Balance, Treble and Bass
7		SHS2425	Fiber, Lever Switch
8		SHS2429	Fiber, Lever Switch
9		SHS2427	Fiber, Lever Switch
10		SDT8061	Shaft, Tuning
11		XCJ6P21E-A	Jack, Headphones
12		SKD3810	Plate, Dial
13		SGX6753	Escutcheon, Dial Scale (Right)
14		SDH495-1	Dial Scale
15		SGX6755	Escutcheon, Dial Scale (Left)
16		SGX6751	Escutcheon, Dial Scale
17		SUG71	Mirror, Dial Scale
18		SXE513-1	Terminal, Lead Wire
19		SDA83	Paper, Pointer Slide
21		SUV457	Bracket, Dial Pointer Cover
22		SDL25	Reflector Plate
23		SHP9291	Paper, Reflector
24		SHR9339	Spacer, Reflector Plate
25		SHRA403	Lock Pin, Dial Lamp Printed Circuit Board M'tg
26		SDR3	Pulley, Dial Cord
27		SHD3X21F	Screw, Pulley M'tg
28		SDZ051-2	Cord, Dial 180 cm (70-15/16)
29		SDD47-1	Drum, Variable Capacitor
30		SDSA4121	Spring, Dial Cord
31		SJF8017	Terminal, Input and Antenna
32		SJF5811	Terminal, Speakers
33		SUS175	Spring, Dial Pointer-Cord
34		SGP2030B	Rear Panel
35	⚠	SJS9205-1	Socket, AC Outlet
36		RHR111	Bushing, AC Cord
37	⚠	RJA9YA	AC Cord, Power Source
38		SUD199-1	Spacer, Fuse Printed Circuit Board
39		SYK761	Top Board
40		SGM77	Ventilation
41		SGX6757	Escutcheon, Ventilation
42		SKZ1629	Side Board. Left
43		SKZ1631	Side Board, Right
44		SKL243	Foot, Set

Ref. No.		Part No.	Part Name & Description
45		SYU211	Bottom Board
			SCREWS WASHER and NUTS
●		**XTB3+10BFN**	Screw, Front Panel, Dial Scale Escutcheon, Reflector Plate M'tg
●		**XTB3+6BFN**	Screw, Front Panel Bracket M'tg
●		**XNS11**	Washer, Tuning Shaft
●		**XWV11**	Nut, Tuning Shaft M'tg
●		**XWV8**	Washer, Volumes & Selector
●		**XSN8**	Nut, Volumes & Selector M'tg
●		**XNS12**	Nut, Headphones Jack M'tg
●		**XTV3+10BFN**	Screw, Dial Scale Mirror, Dial Pointer Cover Bracket M'tg
●		**XWG3BFZ**	Washer, Dial Scale Mirror, Dial Pointer Cover Bracket
●		**XTN5+12B**	Screw, Power Transformer M'tg
●		**XTB4+25AFZ**	Screw, Fuse Printed Circuit Board M'tg
●		**XTB3+8BFZ**	Screw, Input and Antenna Terminal M'tg
●		**XWC3B**	Washer, Input and Antenna Terminal
●		**XTB3+10BFZ**	Screw, Input and Antenna, Speakers Terminal & Heat Sink M'tg
●		**XTN3+12BFZ**	Screw, AC Outlet Socket M'tg
●		**XTV3+10BFZ**	Screw, Ventilation M'tg
●		**XWG3FZ**	Washer, Ventilation
●		**XSN4+20BVS**	Screw, Side Board M'tg
●		**XWA4BFZ**	Washer, Side Board
●		**XWG4FZ**	Washer, Side Board
●		**XTV3+8BFZ**	Screw, Bottom Board M'tg
●		**XWG3FZ**	Washer, Bottom Board
●		**XMA31+13**	Screw, Foot M'tg
			ACCESSORY
A1		SSA267	Cord, FM Indoor Antenna
			PACKING PARTS
P1		SPP567	Polyethylene Bag
P2		SPS2391	Pad, Left and Right Side
P3 [M]		SPG2253-1	Carton Box
P3 [MC]		SPG2255	Carton Box
P4 [M]		SQF10267	Instructions Book, Printed Matter
P4 [MC]		SQF10269	Instructions Book, Printed Matter

■ REPLACEMENT PARTS LIST ..... Electrical Parts

Ref. No.		Part No.	Part Name & Description
			INTEGRTED CIRCUITS
IC101		AN278	IC, FM IF Amplifier
IC102		AN7001ST	IC, AM Converter, FM IF Amplifier, FM Detector & Stereo Decoder (MPX)
IC103		AN6551	IC, Operation Amplifier
IC104		AN6876	IC, FM AM Signal Indicator Driver
IC301		AN6136	IC, AF Muting
IC401, 402		SVITA7322P	IC, Equalizer Amplifier
IC601, 602		AN7060F	IC, Tone Amplifier
IC603, 604		SVISTK1050K	IC, Power Amplifier
IC801		AN6551	IC, LED Driver Amplifier
IC802, 803		AN6875	IC, LED Comparator
IC901		SVITA7317P	IC, Speaker protection Operation Amplifier
			TRANSISTORS
Q1		3SK73-R	Transistor, FM-RF Amplifier (Use in ranks G or R)
Q2		2SC1047-D	Transistor, FM Mixer
Q3		2SC1675-L1	Transistor, FM Oscillator
Q101, 102, 103 105, 106, 107 108, 303		**2SC1328-T**	Transistor, Muting Switching & Regulator
Q104		**2SA666AI-R**	Transistor, FM Tuning
Q301, 302		2SC1684-R	Transistor, AF Amplifier (Use in ranks S or T)

Ref. No.		Part No.	Part Name & Description
Q601, 602		2SA1123-R	Transistor, Pre Drive Amplifier (Use in ranks S. T or R)
Q603		2SC1509F-R	Transistor, Switching
Q701		2SD762-O	Transistor, Ripple Filter (Use in ranks O or P)
Q702		**2SC1328-T**	Transistor, Ripple Filter
Q801, 802, 803 804		**2SC1328-T**	Transistor, Buffer
Q901, 902		**2SC1328-T**	Transistor, Power Drive
Q903, 904		**2SA666AI-R**	Transistor, Power Drive
Q907, 908		2SC1509F-R	Transistor, Speakers Protection
			DIODES
D101, 202		**2-OA99**	Diode, Switching & AM Detector
D102, 103, 104 201, 203, 204		**MA162A**	Diode, Detector, Bias, & A, G, C
D301, 601		SVDMZ306B	Diode, 6V Zener
D701, 909		**SVDSR1K2**	Diode, Bias
D702	⚠	SVDS5VB20F	Rectifier
D703, 704		MA218OB	Diode, 8V Zener
D801, 802, 803 804, 901, 902 907, 908		**MA162A**	Diode, Detector
D903, 904 , 905 906, 910, 911		**MA162A**	Diode, Bias

Ref. No.		Part No.	Part Name & Description
COILS and TRANSFORMERS			
L1		SLA4N15	Coil, FM Antenna
L2		**RLQY25S2**	Coil, Choke
L3		SLD4P13	Coil, FM RF Detector
L4		RLQY15G5-Y	Coil, Choke
L5		SLO4P63-P	Coil, FM Oscillator
L101		SLQX180-2	Coil, Choke
L102		SLQX471-M	Coil, Choke
L201		SLF2C25	Coil, AM Antenna
L202		SLO2C15	Coil, AM Oscillator
L203		SLQX101-3M	Coil, Choke
L301		SLQX393-1Z	Coil, Choke
L601, 602		SLQY15G-3U	Coil, Choke
L801		SLQX101-3M	Coil, Choke
T101		SLI4C515	Transformer, FM IF
T102		SLI4C517	Transformer, Discriminator
T201		SLI2C129R-M	Transformer, AM IF
T202		SLI2C413R	Transformer, AM IF
T1001	⚠	SLT5P161	Transformer, Power Source
CERAMIC FILTERS			
CF101, 102, 103		SVFE107MM-A	Ceramic Filter, 10.70 MHz (Red)
		SVFE107MM-B	Ceramic Filter, 10.68MHz (Blue)
		SVFE107MM-C	Ceramic Filetr, 10.72 MHz (Orange)
		SVFE107MM-D	Ceramic Filter, 10.66 MHz (Brown)
		SVFE107MM-E	Ceramic Filter, 10.74 MHz (Grey)
		(Use pair ranks as same as CF101, 102 and 103)	
CF201		SVFSFU450B	Ceramic Filter, AM 457 kHz
VARIABLE RESISTORS			
VR1		EWF2F25BF5S	Volume Control, 250kΩ(B)
VR2		EVH64F25G25S	Balance Control, 200kΩ(W)
VR3		EWK33F25C15S	Treble Control, 100kΩ(C)
VR4		EWK34F25C15S	Bass Control, 100kΩ(C)
VR101		**EVLS3AA00B54**	Muting Level Adjustment, 50kΩ(B)
VR102		**EVLS3AA00B24**	Signal Level Adjustment, 20kΩ(B)
VR301		EVTS3MA00B53	FM MPX VCO Adjustment, 5kΩ(B)
VR302		**EVLS3AA00B14**	Separation Adjustment, 10kΩ(B)
COMPONENT COMBINATIONS			
Z1		EXRP220K104C	Component Combination, 100kΩ & 22pF
Z2		EXRP102Z223C	Component Combination, 220kΩ & 0.001μF
Z3		EXRP181K682C	Component Combination, 6.8kΩ & 180pF
Z4		EXRP103P102C	Component Combination, 1kΩ & 0.01μF

Ref. No.		Part No.	Part Name & Description
Z101, 102		EXF3YL01C	Component Combination, 0.01μF (X3)
Z103		EXBH85071K	Component Combination, 70Ω (X5)
Z104		EXBH84072K	Component Combination, 7kΩ (X4)
Z201		EXRF203Z471S	Component Combination, 470Ω & 0.02μF
Z202		EXRFS203ZS	Component Combination, 0.01μF (X2)
Z301, 302		EXBH85063K	Component Combination, 6kΩ (X5)
Z303, 304		EXRP182K104C	Component Combination, 100kΩ & 0.0018μF
Z401, 402		EXRP121K823C	Component Combination, 82kΩ & 120pF
Z403, 404		EXRP122K104C	Component Combination, 100kΩ&0.00012μF
Z701, 702		EXRFS203ZS	Component Combination, 0.01μF (X2)
VARIABLE CAPACITORS			
CV1~CV5 (CT1~CT5)		ECVC751K144A	Variable Capacitor, with Trimmer
FUSE			
F1	⚠	XBA1F40NU14	Fuse, 4A (125V)
SWITCHES			
S1		SSR149	Switch, Selector
S2, 3		SSL153	Switch, Tape Monitor & Rec Mode
S4		SSL155	Switch, FM Muting
S5		SSL149	Switch, Loudness
S6, 7		SSL159	Switch, Acoustic High & Acoustic Low
S8		SSL151	Switch, Power Display Range Selector
S9		SSL163	Switch, Speaker
S10	⚠	SSL133	Switch, Power Source
LAMPS			
PL1~12	⚠	XAMR68S17	Lamp Dial, 80mA (8V)
INDICATORS			
DB101		SWV13	Indicator, Dial Pointer
DB102		SWV17	Indicator, Signal
DB103		LN04209	Indicator, Program
DB801		LN11107	Indicator, Power Level Display
RELAY			
RLY601	⚠	SSY69	Relay, Speaker Protection

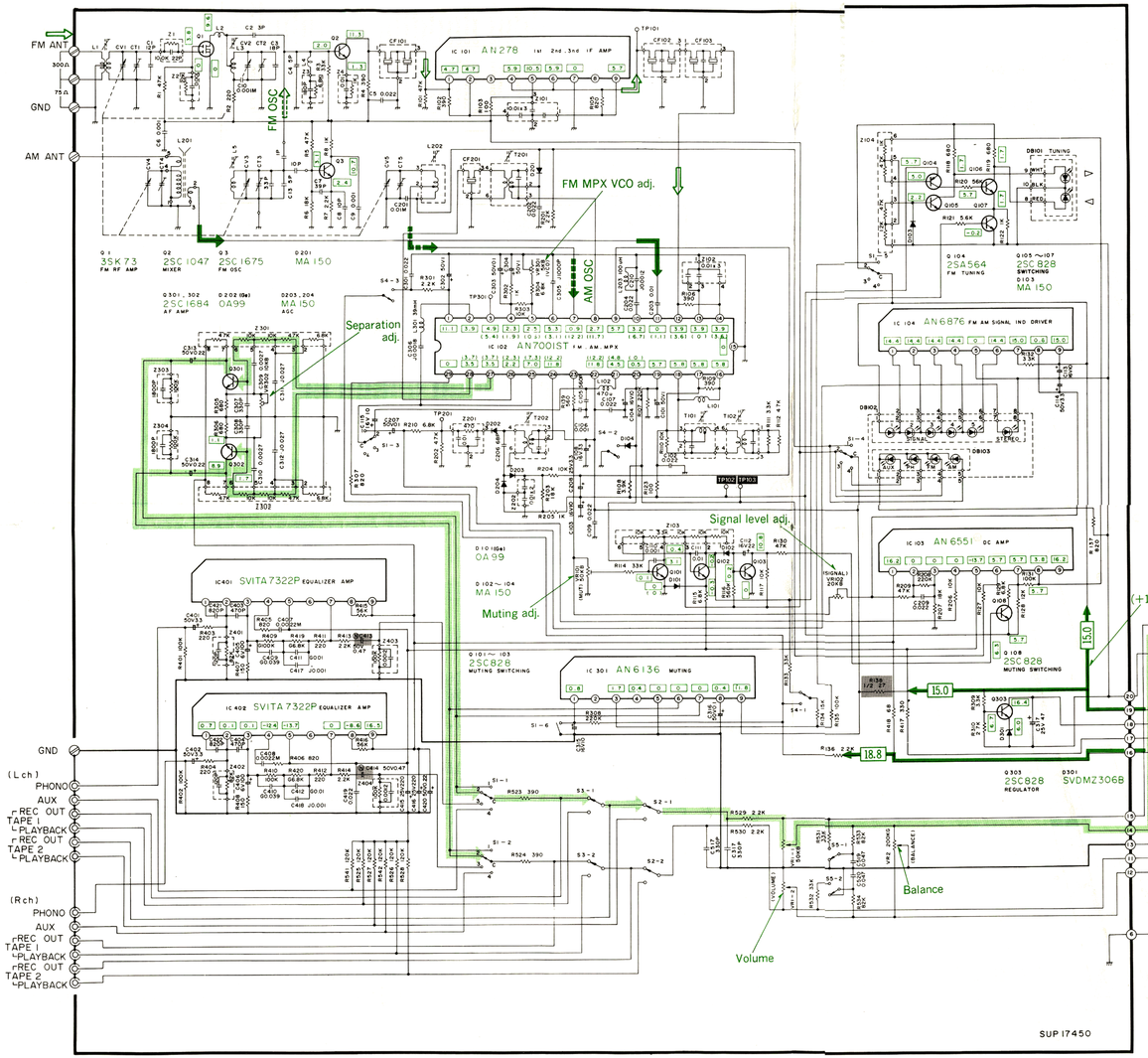

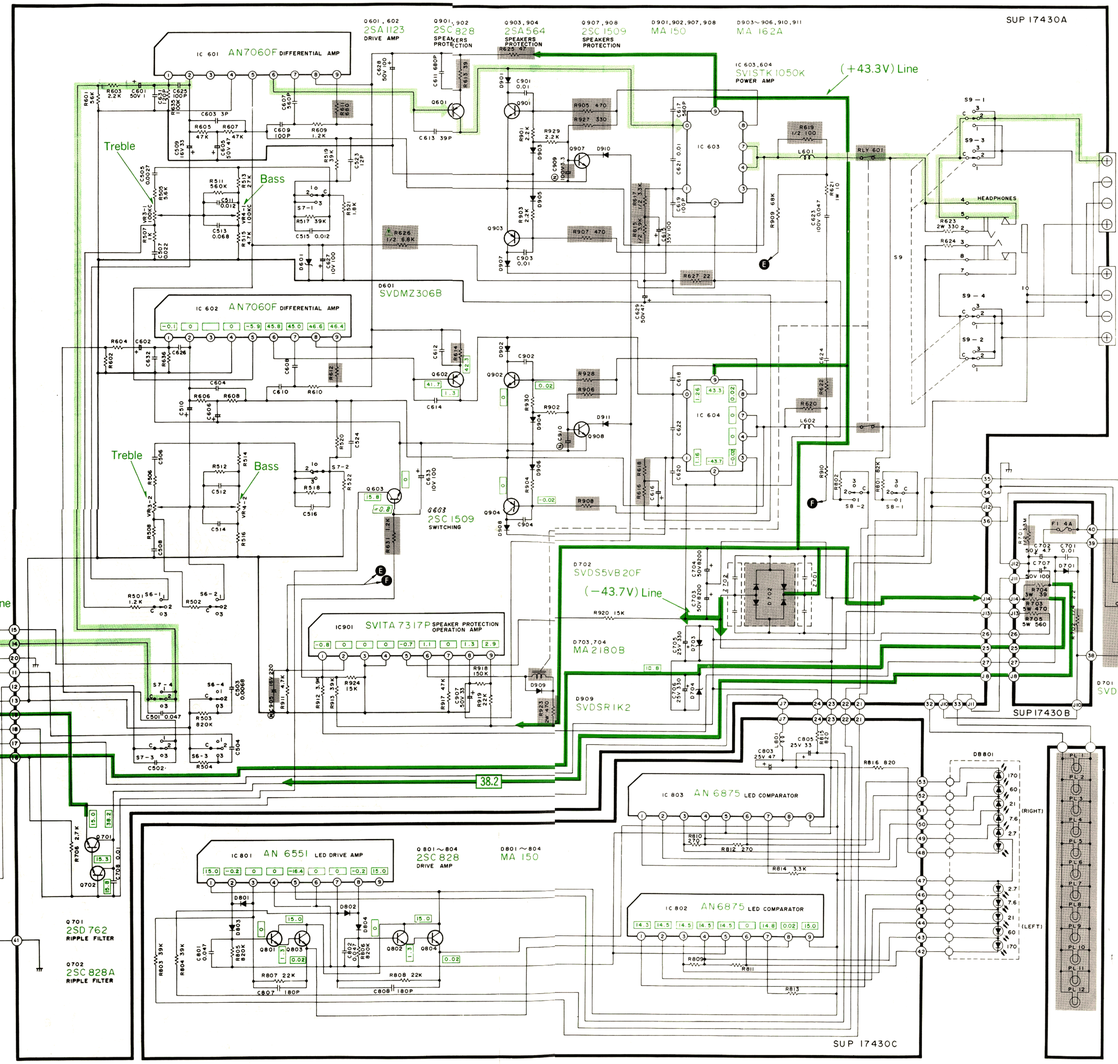

IMPORTANT SAFETY NOTICE

THE SHADED AREA ON THIS SCHEMATIC DIAGRAM INCORPORATES SPECIAL FEATURES IMPORTANT FOR SAFETY.
WHEN SERVICING IT IS ESSENTIAL THAT ONLY MANUFACTURS SPECIFIED PARTS BE USED FOR THE CRITICAL COMPONENTS IN THE SHADED AREAS OF THE SCHEMATIC.

Notes:

1. **S1-1~S1-6**: Selector switch in "**FM**" position.
   ① AM⟶ ② FM⟶ ③ phono⟶ ④ AUX
2. **S2-1, S2-2**: Tape monitor switch in "**source**" position. source⟶tape 1
3. **S3-1, S3-2**: Tape monitor switch in "**source**" position. source⟶tape 2
4. **S4-1~S4-3**: FM muting/mode switch in "**ON/FM AUTO**" position.
5. **S5-1, S5-2**: Loudness switch in "OFF" position.
6. **S6-1~S6-4**: Boost/filter switch (high) in "**OFF**" position.
   ① high boost⟶ ② off⟶ ③ high filter
7. **S7-1~S7-4**: Boost/filter switch (low) in "**OFF**" position.
   ① low boost⟶ ② off⟶ ③ low filter
8. **S8**: Power display rang selector switch in "**X1**" position.
   ① X0.1⟶ ② X1⟶ ③ off
9. **S9**: Speaker selector switch in "**MAIN**" position.
   ① remote⟶ ② main⟶ ③ main + remote
10. **S10**: Power source switch in "**ON**" position.

■ REPLACEMENT PARTS LIST ..... Resistors and Capacitorst Parts

NOTES: 1. Part numbers are indicated on most mechanical parts Please ust this part number for parts orders.
2. ⚠ indicates that only parts specified by the manufacturer be used for safety.
3. (M) is available in U.S.A. (MIC) is available in Canada.

Ref. No.		Part No.	Part Name & Description			
RESISTORS						
R1		**ERD25TJ473**	Carbon,	47kΩ,	1/4W,	±5%
R2		**ERD25FJ221**	Carbon,	220Ω,	1/4W,	±5%
R3		**ERD25TJ333**	Carbon,	33kΩ,	1/4W,	±5%
R4		**ERD25FJ391**	Carbon,	390Ω,	1/4W,	±5%
R5		**ERD25TJ473**	Carbon,	47kΩ,	1/4W,	±5%
R6		**ERD25TJ183**	Carbon,	18kΩ,	1/4W,	±5%
R7		**ERD25FJ222**	Carbon,	2.2kΩ,	1/4W,	±5%
R8		**ERD25FJ102**	Carbon,	1kΩ,	1/4W,	±5%
R101		**ERD25TJ473**	Carbon,	47kΩ,	1/4W,	±5%
R102		**ERD25FJ391**	Carbon,	390Ω,	1/4W,	±5%
R103		**ERD25FJ101**	Carbon,	100Ω,	1/4W,	±5%
R105		**ERD25FJ821**	Carbon,	820Ω,	1/4W,	±5%
R106		**ERD25FJ391**	Carbon,	390Ω,	1/4W,	±5%
R107		**ERD25TJ224**	Carbon,	220kΩ,	1/4W,	±5%
R108		**ERD25FJ392**	Carbon,	3.9kΩ,	1/4W,	±5%
R109		**ERD25FJ391**	Carbon,	390Ω,	1/4W,	±5%
R110		**ERD25FJ103**	Carbon,	10kΩ,	1/4W,	±5%
R111		**ERD25FJ332**	Carbon,	3.3kΩ,	1/4W,	±5%
R112		**ERD25TJ473**	Carbon,	47kΩ,	1/4W,	±5%
R114		**ERD25TJ333**	Carbon,	33kΩ,	1/4W,	±5%
R115		**ERD25FJ682**	Carbon,	6.8kΩ,	1/4W,	±5%
R116		**ERD25TJ564**	Carbon,	560kΩ,	1/4W,	±5%
R117		**ERD25FJ103**	Carbon,	10kΩ,	1/4W,	±5%
R118,119		**ERD25FJ681**	Carbon,	680Ω,	1/4W,	±5%
R120		**ERD25TJ563**	Carbon,	56kΩ,	1/4W,	±5%
R121		**ERD25FJ562**	Carbon,	5.6kΩ,	1/4W,	±5%
R122		**ERD25FJ102**	Carbon,	1kΩ,	1/4W,	±5%
R123		**ERD25FJ101**	Carbon,	100Ω,	1/4W,	±5%
R127		**ERD25FJ103**	Carbon,	10kΩ,	1/4W,	±5%
R128		**ERD25TJ123**	Carbon,	12kΩ,	1/4W,	±5%
R129		**ERD25FJ682**	Carbon,	6.8kΩ,	1/4W,	±5%
R130		**ERD25TJ473**	Carbon,	47kΩ,	1/4W,	±5%
R131		**ERD25TJ104**	Carbon,	100kΩ,	1/4W,	±5%
R132		**ERD25FJ332**	Carbon,	3.3kΩ,	1/4W,	±5%
R133		**ERD25TJ333**	Carbon,	33kΩ,	1/4W,	±5%
R134		**ERD25TJ153**	Carbon,	15kΩ,	1/4W,	±5%
R135		**ERD25TJ104**	Carbon,	100kΩ,	1/4W,	±5%
R136		**ERD25FJ222**	Carbon,	2.2kΩ,	1/4W,	±5%
R137		**ERD25FJ821**	Carbon,	820Ω,	1/4W,	±5%
R138	⚠	ERQ12HJ270	Fuse Type Metallic,	27Ω,	1/2W,	±5%
R139		**ERD25FJ561**	Carbon,	560Ω,	1/4W,	±5%
R201		**ERD25FJ222**	Carbon,	2.2kΩ,	1/4W,	±5%
R202		**ERD25FJ472**	Carbon,	4.7kΩ,	1/4W,	±5%
R203		**ERD25TJ183**	Carbon,	18kΩ,	1/4W,	±5%
R204		**ERD25FJ103**	Carbon,	10kΩ,	1/4W,	±5%
R205		**ERD25FJ102**	Carbon,	1kΩ,	1/4W,	±5%
R206		**ERD25FJ103**	Carbon,	10kΩ,	1/4W,	±5%
R207		**ERD25TJ183**	Carbon,	18kΩ,	1/4W,	±5%
R208		**ERD25TJ224**	Carbon,	220kΩ,	1/4W,	±5%
R209		**ERD25TJ473**	Carbon,	47kΩ,	1/4W,	±5%
R210		**ERD25FJ682**	Carbon,	6.8kΩ,	1/4W,	±5%
R301		**ERD25FJ222**	Carbon,	2.2kΩ,	1/4W,	±5%
R302		**ERD25FJ102**	Carbon,	1kΩ,	1/4W,	±5%
R303		**ERD25FJ103**	Carbon,	10kΩ,	1/4W,	±5%
R304		ERO25CKF6801	Metal film,	6.8kΩ,	1/4W,	±1%
R305, 306		**ERD25FJ681**	Carbon,	680Ω,	1/4W,	±5%
R307		**ERD25FJ821**	Carbon,	820Ω,	1/4W,	±5%
R308		**ERD25TJ224**	Carbon,	220kΩ,	1/4W,	±5%
R309		**ERD25FJ332**	Carbon,	3.3kΩ,	1/4W,	±5%
R310		**ERD25FJ272**	Carbon,	2.7kΩ,	1/4W,	±5%
R401, 402		ERO25CKF1003	Metal Film	100kΩ,	1/4W,	±1%
R403, 404		**ERD25FJ221**	Carbon,	220Ω,	1/4W,	±5%
R405, 406		**ERD25FJ821**	Carbon,	820Ω,	1/4W,	±5%
R407, 408		**ERD25FJ151**	Carbon,	150Ω,	1/4W,	±5%
R409, 410		ERO25CKF1003	Metal Film,	100kΩ,	1/4W,	±1%
R411, 412		**ERD25FJ221**	Carbon,	220Ω,	1/4W,	±5%
R413, 414		**ERD25FJ222**	Carbon,	2.2kΩ,	1/4W,	±5%
R415, 416		**ERD25TJ563**	Carbon,	56kΩ,	1/4W,	±5%
R417		**ERD25FJ331**	Carbon,	330Ω,	1/4W,	±5%
R418		**ERD25FJ680**	Carbon,	68Ω,	1/4W,	±5%
R419, 420		ERO25CKF6801	Metal Film,	6.8kΩ,	1/4W,	±1%
R501, 502		**ERD25FJ122**	Carbon,	1.2kΩ,	1/4W,	±5%
R503, 504		**ERD25TJ824**	Carbon,	820kΩ,	1/4W,	±5%
R505, 506		**ERD25FJ562**	Carbon,	5.6kΩ,	1/4W,	±5%
R507, 508		**ERD25FJ102**	Carbon,	1kΩ,	1/4W,	±5%

Ref. No.		Part No.	Part Name & Description			
R511, 512		**ERD25TJ564**	Carbon,	560kΩ,	1/4W,	±5%
R513, 514		**ERD25TJ273**	Carbon,	27kΩ,	1/4W,	±5%
R515, 516		**ERD25FJ472**	Carbon,	4.7kΩ,	1/4W,	±5%
R517, 518		**ERD25TJ393**	Carbon,	39kΩ,	1/4W,	±5%
R519, 520		**ERD25TJ393**	Carobn,	39kΩ,	1/4W,	±5%
R521, 522		**ERD25FJ182**	Carbon,	1.8kΩ,	1/4W,	±5%
R523, 524		**ERD25FJ391**	Carbon,	390Ω,	1/4W,	±5%
R525, 526		**ERD25TJ124**	Carbon,	120kΩ,	1/4W,	±5%
R527, 528		**ERD25TJ124**	Carbon,	120kΩ,	1/4W,	±5%
R529, 530		**ERD25FJ222**	Carbon,	2.2kΩ,	1/4W,	±5%
R531, 532		**ERD25TJ333**	Carbon,	33kΩ,	1/4W,	±5%
R533, 534		**ERD25TJ823**	Carbon,	82kΩ,	1/4W,	±5%
R541, 542		**ERD25TJ124**	Carbon,	120kΩ,	1/4W,	±5%
R601, 602		**ERD25TJ563**	Carbon,	56kΩ,	1/4W,	±5%
R603, 604		**ERD25FJ222**	Carbon,	2.2kΩ,	1/4W,	±5%
R605, 606		**ERD25TJ473**	Carbon,	47kΩ,	1/4W,	±5%
R607, 608		**ERD25TJ473**	Carbon,	47kΩ,	1/4W,	±5%
R609, 610		**ERD25FJ122**	Carbon,	1.2kΩ,	1/4W,	±5%
R611, 612	⚠	**ERD25FJ681**	Carbon,	680Ω,	1/4W,	±5%
R613, 614	⚠	**ERD25FJ390**	Carbon,	39Ω,	1/4W,	±5%
R615, 616	⚠	**ERD50FJ392**	Carbon,	3.9kΩ,	1/2W,	±5%
R617, 618	⚠	**ERD50FJ332**	Carbon,	3.3kΩ,	1/2W,	±5%
R619, 620	⚠	**ERD50FJ101**	Carbon,	100Ω,	1/2W,	±5%
R621, 622		**ERG1ANJ100**	Carbon,	10Ω,	1W,	±5%
R623, 624		ERG2ANJ331	Metal Oxide,	330Ω,	2W,	±5%
R625	⚠	**ERD25FJ470**	Carbon,	47Ω,	1/4W,	±5%
R626	⚠	**ERD50FJ682**	Carbon,	6.8kΩ,	1/2W,	±5%
R627	⚠	**ERD25FJ220**	Carbon,	22Ω,	1/4W,	±5%
R631		**ERD25FJ122**	Carbon,	1.2kΩ,	1/4W,	±5%
R635, 636		**ERD25TJ104**	Carbon,	100kΩ,	1/4W,	±5%
R701	⚠	ERC12ZGK335	Solid,	3.3MΩ,	1/2W,	±10%
R702		ERD25FAJ2R2	Carbon,	2.2Ω,	1/4W,	±5%
R703	⚠	**ERF5SJ471**	Non-Flammable,	470Ω,	5W,	±5%
R704	⚠	ERQ3CJ390	Fuse Type Metallic,	39Ω,	3W,	±5%
R705	⚠	ERF5SJ561	Non-Flammable,	560Ω,	5W,	±5%
R706		**ERD25FJ272**	Carbon,	2.7kΩ,	1/4W,	±5%
R801, 802		**ERD25TJ823**	Carbon,	82kΩ,	1/4W,	±5%
R803, 804		**ERD25TJ393**	Carbon,	39kΩ,	1/4W,	±5%
R805, 806		**ERD25TJ824**	Carbon,	820kΩ,	1/4W,	±5%
R807, 808		**ERD25TJ223**	Carbon,	22kΩ,	1/4W,	±5%
R809, 810		**ERD25FJ271**	Carbon,	270Ω,	1/4W,	±5%
R811, 812		**ERD25FJ271**	Carbon,	270Ω,	1/4W,	±5%
R813, 814		**ERD25FJ332**	Carbon,	3.3kΩ,	1/4W,	±5%
R815, 816		**ERD25FJ821**	Carbon,	820Ω,	1/4W,	±5%
R901, 902		**ERD25FJ222**	Carbon,	2.2kΩ,	1/4W,	±5%
R903, 904		**ERD25FJ222**	Carbon,	2.2kΩ,	1/4W,	±5%
R905	⚠	**ERD25FJ471**	Carbon.	470Ω,	1/4W,	±5%
R906	⚠	**ERD25FJ331**	Carbon,	330Ω,	1/4W,	±5%
R907, 908	⚠	**ERD25FJ471**	Carbon,	470Ω,	1/4W,	±5%
R909, 910		**ERD25TJ683**	Carbon,	68kΩ,	1/4W,	±5%
R911		**ERD25FJ472**	Carbon,	4.7kΩ,	1/4W,	±5%
R912		**ERD25FJ392**	Carbon,	3.9kΩ,	1/4W,	±5%
R913		**ERD25TJ393**	Carbon,	39kΩ,	1/4W,	±5%
R917		**ERD25TJ473**	Carbon,	47kΩ,	1/4W,	±5%
R918		**ERD25TJ154**	Carbon,	150kΩ,	1/4W,	±5%
R919		**ERD25TJ223**	Carbon,	22kΩ,	1/4W,	±5%
R920		**ERD25TJ153**	Carbon,	15kΩ,	1/4W,	±5%
R923		ERG2ANJ471	Metal Oxide,	470Ω,	2W,	±5%
R924		**ERD25TJ153**	Carbon,	15kΩ,	1/4W,	±5%
R927	⚠	**ERD25FJ331**	Carbon,	330Ω,	1/4W,	±5%
R928	⚠	**ERD25FJ471**	Carbon,	470Ω,	1/4W,	±5%
R929, 930		**ERD25FJ222**	Carbon,	2.2kΩ,	1/4W,	±5%
CAPACITORS						
C1		ECCD1H120KC	Ceramic,	12pF,	50V,	±10%
C2		ECCD1H030CC	Ceramic,	3pF,	50V,	±0.25pF
C3		ECCD1H180KC	Ceramic,	18pF,	50V,	±10%
C4		ECCD1H050KC	Ceramic,	5pF,	50V,	±0.25pF
C5		ECKD1H223ZF	Ceramic,	0.022μF,	50V,	+80% −20%
C6		ECKD1H102ZF	Ceramic,	0.001μF,	50V,	+80% −20%
C7		ECCD1H390KC	Ceramic,	39pF,	50V,	±10%
C8		ECCD1H100KC	Ceramic,	10pF,	50V,	±10%
C9		ECKD1H102ZF	Ceramic,	0.001μF,	50V,	+80% −20%
C10		ECKD1H102MDA	Ceramic,	0.001μF,	50V,	±20%
C13		ECCD1H050CC	Ceramic,	5pF,	50V,	±0.25pF
C101		**ECEA50Z1**	Electrolytic,	1μF,	50V	

Ref. No.		Part No.	Part Name & Description			
C102		ECKD1H223ZF	Ceramic,	0.022μF,	50V,	+80 −20 %
C103, 104		**ECEA1HS100**	Electrolytic,	10μF	50V	
C105		ECKD1H561KB	Ceramic,	560pF,	50V,	±10%
C106		ECKD1H102ZF	Ceramic,	0.001μF,	50V,	+80 −20 %
C107		ECKD1H223ZF	Ceramic,	0.022μF,	50V,	+80 −20 %
C108		**ECEA1CS330**	Electrolytic	33μF,	16V	
C109		ECKD1H223ZF	Ceramic,	0.022μF,	50V,	+80 −20 %
C110		ECKD1H102ZF	Ceramic,	0.001μF,	50V,	+80 −20 %
C111		ECKD1H103ZF	Ceramic,	0.01μF,	50V,	+80 −20 %
C112		**ECEA1ES220**	Electrolytic,	22μF,	25V	
C113		**ECEA1HS100**	Electrolytic,	10μF,	50V	
C114		**ECEA50Z3R3**	Electrolytic,	3.3μF,	50V	
C115		**ECEA1HS100**	Electrolytic,	10μF,	50V	
C201		ECKD1H103MD	Ceramic,	0.01μF,	50V,	±20%
C202		ECKD1H223ZF	Ceramic,	0.022μF,	50V,	+80 −20 %
C203		ECKD1H103ZF	Ceramic,	0.01μF,	50V,	+80 −20 %
C204		ECKD1H223ZF	Ceramic,	0.022μF,	50V,	+80 −20 %
C206		ECCD1H680K	Ceramic,	68pF,	50V,	±10%
C207		**ECEA50ZR1**	Electrolytic,	0.1μF,	50V	
C208		**ECEA50Z3R3**	Electrolytic,	3.3μF,	50V	
C209		ECKD1H223ZF	Ceramic,	0.022μF,	50V,	+80 −20 %
C210		ECQM1H122JZ	Polyester,	0.0012μF,	50V,	± 5%
C301		ECKD1H223ZF	Ceramic,	0.022μF,	50V,	+80 −20 %
C302		**ECEA50ZI**	Electrolytic,	1μF,	50V	
C303		**ECEA50ZR1**	Electrolytic,	0.1μF,	50V	
C304		**ECEA50Z1**	Electrolytic,	1μF,	50V	
C305		ECQP1102JZ	Polypropylene,	0.001μF,	125V,	± 5%
C306		ECQM1H182JZ	Polyester,	0.0018μF,	50V,	± 5%
C307, 308		ECKD1H331KB	Ceramic,	330pF,	50V,	±10%
C309, 310		ECQM1H272KZ	Polyester,	0.0027μF,	50V,	±10%
C311, 312		ECQM1H273JZ	Polyester,	0.027μF,	50V,	± 5%
C313, 314		**ECEA50ZR22**	Electrolytic,	0.22μF,	50V	
C315		**ECEA1HS100**	Electrolytic,	10μF,	50V	
C316		**ECEA50ZR1**	Electrolytic,	0.1μF,	50V	
C317		**ECEA1ES470**	Electrolytic,	47μF,	25V	
C401, 402		**ECEA50M3R3R**	Electrolytic,	3.3μF,	50V	
C403, 404		ECKD1H471KB	Ceramic,	470pF,	50V,	±10%
C405, 406		**ECEA1AS101**	Electrolytic,	100μF,	10V,	
C407, 408		ECKD1H222MD	Ceramic,	0.0022μF,	50V,	±20%
C409, 410		ECQP1393GZ	Polypropylene,	0.039μF,	125V,	± 2%
C411, 412		ECQP1103GZ	Polypropylene,	0.01μF,	125V,	± 2%
C413, 414	⚠	ECEA1HNR47	Non-polar Electrolytic,		0.47μF,	50V
C415, 416		**ECEA1ES221**	Electrolytic,	220μF,	25V	
C417, 418		ECQM1H102KZ	Polyester,	0.001μF,	50V,	±10%
C419		ECKD1H223ZF	Ceramic,	0.022μF,	50V	+80 −20 %
C420		**ECEA50ZR22**	Electrolytic,	0.22μF,	50V	

Ref. No.		Part No.	Part Name & Description			
C421, 422		ECKD1H821KB	Ceramic,	820pF,	50V,	±10%
C501, 502		ECQM1H473KZ	Polyester,	0.047μF,	50V,	±10%
C503, 504		ECQM1H682KZ	Polyester,	0.0068μF,	50V,	±10%
C505, 506		ECQM1H272KZ	Polyester,	0.0027μF,	50V,	±10%
C507, 508		ECQM1H223KZ	Polyester,	0.022μF,	50V,	±10%
C509, 510		**ECEA1CS330**	Electrolytic,	33μF,	16V	
C511, 512		ECQM1H123KZ	Polyester,	0.012μF,	50V,	±10%
C513		ECQM1H683KZ	Polyester,	0.068μF,	50V,	±10%
C514		ECQM1H683KZ	Polyester,	0.068μF,	50V,	±10%
C515, 516		ECQM1H123KZ	Polyester,	0.012μF,	50V,	±10%
C517, 518		ECKD1H331KB	Ceramic,	330pF,	50V,	±10%
C519, 520		ECQM1H473KZ	Polyester,	0.047μF,	50V,	±10%
C523, 524		ECCD1H120K	Ceramic,	12pF,	50V,	±10%
C601, 602		**ECEA50M1**	Electrolytic,	1μF,	50V	
C603, 604		ECCD2H030C	Ceramic,	3pF,	500V,	±0.25pF
C605, 606		**ECEA1HS470**	Electrolytic,	47μF,	50V	
C607, 608		ECKD1H561KB	Ceramic,	560pF,	50V,	±10%
C609, 610		ECCD1H101K	Ceramic,	100pF,	50V,	±10%
C611, 612		ECKD1H681KB	Ceramic,	680pF	50V,	±10%
C613, 614		ECCD2H390K	Ceramic,	39pF,	500V,	±10%
C615, 616		**ECEA1VS101**	Electrolytic,	100μF,	35V	
C617, 618		ECKD2H561KB	Ceramic,	560pF,	500V,	±10%
C619, 620		ECCD2H101K	Ceramic,	100pF,	500V,	±10%
C621, 622		ECKD1H103ZF	Ceramic,	0.01μF,	50V,	+80 −20 %
C623, 624		ECQM1H473KZ	Polyester,	0.047μF,	50V,	±10%
C625, 626		ECCD1H101K	Ceramic,	100pF,	50V,	±10%
C627		**ECEA1AS101**	Electrolytic,	100μF,	10V	
C628		**ECEA1HS101**	Electrolytic,	100μF,	50V	
C629		**ECEA1HS470**	Electrolytic,	47μF,	50V	
C631, 632		ECCD1H121K	Ceramic,	120pF,	50V	±10%
C633		**ECEA1AS101**	Electrolytic,	100μF,	10V	
C701		ECKD1H103ZF	Ceramic,	0.01μF,	50V	+80 −20 %
C702		**ECEA50Z4R7**	Electrolytic,	4.7μF,	50V	
C703, 704		ECETS1HV822U	Electrolytic,	8200μF,	50V	
C705, 706		**ECEA1ES331**	Electrolytic,	330μF,	25V	
C707		**ECEA1HS101**	Electrolytic,	100μF,	50V	
C708		ECKD1H103ZF	Ceramic,	0.01μF,	50V,	+80 −20 %
C801, 802		ECQM1H473KZ	Polyester,	0.047μF,	50V	±10%
C803		**ECEA1ES470**	Electrolytic,	47μF,	25V	
C805		**ECEA1VS330**	Electrolytic,	33μF,	35V	
C807, 808		ECCD1H181K	Ceramic,	180pF,	50V,	±10%
C901, 902		ECKD1H103ZF	Ceramic,	0.01μF,	50V,	+80 −20 %
C903, 904		ECKD1H103ZF	Ceramic,	0.01μF,	50V,	+80 −20 %
C905	⚠	ECEA1CN221	Non-polar Electrolytic,		220μF,	16V
C907		**ECEA1JS330**	Non-polar Electrolytic,		33μF,	63V
C909, 910	⚠	ECEA1HN3R3	Non-polar Electrolytic,		3.3μF,	50V
C1001	⚠	ECKDMY103PF	Ceramic,	0.01μF,	125VAC,	+100 −0 %

Printed in Japan
79104350 Ⓐ Y.K.